FUEL MANAGEMENT SYSTEMS

TS-550 evo UPGRADES

The industry's most intuitive user interface is now even more user friendly. We've enhanced the installation and programming functions to make them easier and faster than before. Expanded functionality has also been added to better support DEF/AdBlue® systems and generator applications.

NEW ENHANCEMENTS

Installation & Programming

- Elimination of tank length entry in setup.
- The ability to import or export a CSV file for tank setup.
- Increase of up to 500 correction points in setup.
- Tank level set-up now based on percentage (High, High/High, Low, Low/Low).

DEF/AdBlue® Recirculation

- Displays the dynamic temperature.
- Indicates when the pump is activated.
- Activation and deactivation of the pump can now be configurable based on temperature programmed into the setup.
- Alarms now configurable to indicate excessive run.
- Configurable pump activity logging.

Generator Applications

- Operation based on stated conditions.
- Temperature non-alarm & alarms set points.
- Level and volume non-alarm set points.
- Relay timeout functionality added.
- Additional logic functions AND/OR/XOR/NOT.
- Activate submersible turbine pump via Turbine Pump Interface (TPI) with condition setting.
- 4-20 mA should release 4-20 ma

AdBlue® is a registered trademark of Verband der Automobilindustrie.

TS-550 EVO & TS-5000 EVO FUEL MANAGEMENT SYSTEMS

INCON™ brand TS-550 evo and TS-5000 evo fuel management systems bring a new level of usability and functionality. A highly evolved user interface and blisteringly-fast new processor based on the proven T5 Series platform makes everything from daily functions to advanced set-up and programming simple for every user.

Highlights

- Capable of monitoring even the largest sites.
- Continuous inventory monitoring and tank testing through proven magnetostrictive probe technology.
- Density measurement and alarm capabilities.
- Patented AutoLearn™ electronic line leak detection capability, including Statistical Line Leak Detection for high throughput lines.
- Standard communication ports including one Ethernet and RS-485, two USB and RS-232.
- Complete web interface and email capabilities.
- Turbine Pump Interface, intelligent STP control.
- Programmable product colors.
- Programmable One Touch buttons.
- Quick Jump menu ease of navigation.
- F.A.S.T. programming with the Franklin Auto Setup Tool.
- Available continuous 24 hour leak detection (SCALD).

Specifications

- Number of tanks monitored: 36 (72*)
- Number of lines monitored: 24 (48*)
- Sensor input channels: 36 (72*)
- Dry contact input channels: 2
- AC input channels: 36 (72*)
- 4-20 ma input channels: 24 (48*)
- Relay output channels: 26 (50*)
- Display type: 7" (17.78 cm) color LCD touch screen
- Printer type: Thermal
- Alarm: Internal audible alarm
- LEDs: Alarm, warning, and power
- Applicable liquids: Petroleum, chemicals, and hazardous waste
- Level units: Inches, centimeters, and millimeters
- Volume units: Gallons or liters (mass with density option)
- Power requirements: 110 to 240 VAC, 50/60 Hz, 2.6 Amps
- Operating temperature: 32° to 104 °F (0° to 40 °C)
- Humidity: 0-90% non-condensing

Dimensions:

- TS-550 evo: 12"/305 mm (H), 10.25"/260.4 mm (W), 9"/229 mm (D)
- TS-5000 evo: 11.1"/282 mm (H), 16.5"/419 mm (W), 9"/229 mm (D)

*Maximum number when including additional options.

Approvals

- UL, cUL, ATEX, IECEx
- Third party certification of leak detection capabilities.

Specifications - continued

Capabilities

- Inventory and delivery management
- Leak detection sensors
- Static and continuous tank testing
- Static and Statistical Electronic Line Leak Detection
- High, low, and water alarm set points
- Inventory reconciliation / tank autocalibration
- Density and mass measurement
- Secondary Containment Monitoring (vacuum)
- Turbine Pump Interface (TPI)
- Email notifications
- Back-up generator monitoring / fuel flow control
- MODBUS® compatibility

Connectivity

- Ethernet/complete web interface
- RS-232/485
- USB
- Fax/data modem
- Lon™ via Echelon

DEF/AdBlue®

- Recirculation capabilities for DEF/AdBlue® applications including pump activation/deactivation based on temperature sensor data with time and duration condition customization options.

Ordering Information

TS-550 evo

Model	Description
T550ED	TS-550 evo base console without printer
T550EDP	TS-550 evo base console with printer

TS-5000 evo

Model	Description
5000ED	TS-5000 evo base console without printer
T5000EDP	TS-5000 evo base console with printer

Expansion Console

Model	Description
EVO-EXPC	Secondary console to add eleven additional plug-in modules to the primary TS-550 evo console, comes without a display or printer
EVO-EXPC2	Secondary console to add six additional plug-in modules to the primary TS-550 evo console, comes without a display or printer

TS-550 evo and TS-5000 evo Console Hardware and Software Options

TS-550/5000 evo consoles come standard with the ability to perform in-tank static leak detection. The following software and hardware options can be added to customize your console. The internal hardware options will be factory installed when ordered with the console.

Internal Hardware Options

Model	Description
EVO-DIMIB	(I) Internal dispenser interface module, dispenser interface cable must be ordered separately
EVO-LON	(E) LON™ communication module, IFSF protocol capability
TS-MDMIB	(M) Internal modem, includes fax and data software capability

Note: Only one EVO-DIM or EVO-LON module can be installed per console.

Internal Hardware Options

Model	Description
TS-TT	(T) Statistical Continuous Automatic Leak Detection, 24 hour continuous tank testing software
TS-TRAC	(R) Tank inventory reconciliation and autocalibration
TS-ELLD	(L) Electronic line leak detection
TS-SCM	(S) Secondary containment monitoring
TS-CON	(C) DEF/AdBlue® recirculation, scheduling, and timer conditions

Ordering Information - continued

Ordering Guide

Console model, software, and hardware options can be listed separately or combined when ordering. Systems shipped from the factory will list the combined part number. Complete console part numbers have a specific order and are created using the following guidelines:

TX PMIE / TRLSC

TX = Base Model Options

T550ED = TS-550 evo base console with display

T5000ED = TS-5000 evo base console with display

PMIE = Hardware Options (choose all that apply)*

P = Printer

M = Internal modem

I = Dispenser interface module

E = LON module

TRLSC = Hardware Options (choose all that apply)

T = SCALD 24-hour tank testing

R = Reconciliation/Autocalibration

L = Line leak detection

S = Secondary containment monitoring

C = Recirculation, scheduling, and timer conditions

Example: T550EDPMI/TRLS = TS-550 evo base console with display, with printer, with internal modem, with dispenser interface module, with SCALD.

*Only one EVO-DIM or EVO-LON module can be installed per console.

Modules

1. Controller module
2. Power supply module
3. AC input module
4. IO module
5. Relay module
6. 10 Amp relay module
7. Available for module
8. Available for module
9. 2-wire sensor module
10. 3-wire sensor module
11. Probe module
12. 4-20mA input module
13. Available for module

TS-550 evo and TS-5000 evo allow for a maximum of nine intrinsically safe modules. There is also a maximum of three of any individual intrinsically safe modules that can be installed in one console.

MODBUS® is a registered trademark of Schneider Electric USA, Inc.

TS-550 & TS-5000 FUEL MANAGEMENT SYSTEMS

INCON™ brand TS-550 and TS-5000 fuel management systems feature a modular design which provides compliance and fuel management capability in a single enclosure.

Highlights

- Monitors up to 72 tanks.
- Continuous inventory monitoring and tank testing through proven magnetostrictive probe technology.
- Highest rated continuous 24 hour leak detection (SCALD) in the industry.
- Density measurement and alarm capabilities.
- Patented AutoLearn™ electronic line leak detection capability, including Statistical Line Leak Detection for high throughput lines.
- Standard communication ports including one Ethernet and USB, two RS-232.
- Internal fax and data modem options.
- Interstitial and piping sump leak sensing for up to 72 sensors.
- Can handle 72 dispenser hook inputs, eliminating need for an external box.
- Approved by the California Air Resources Board EO VR-202 & VR-208.

Specifications

- Number of tanks monitored: 72
- Input channels: 2
- Output-only channels: 2
- Display type: Touch screen LCD
- Printer type: Thermal
- Applicable liquids: Petroleum, chemicals, and hazardous waste
- Level units: Inches, centimeters, and millimeters
- Volume units: Gallons or liters
- Display size: 320 × 240 pixels
- Power requirements: 110 to 220 VAC, +15%, -10%, 150 Watt maximum, 1.5 Amps
- Operating temperature: 32° to 104 °F (0° to 40 °C)
- Storage temperature: -4° to 140 °F (-20° to 60 °C)
- LCD backlight contains mercury; dispose of properly.

Approvals

- UL, cUL, ATEX, IECEx
- Third party certification of leak detection capabilities.

Specifications - continued

Applications

The flexible architecture of the TS-550 and TS-5000 allows multiple applications to run concurrently, satisfying current business and regulatory requirements.

- Fuel management system applications provide accurate inventory information, third party-approved tank and line leak detection, automated inventory reconciliation and submersible pump monitoring.
- The vapor recovery monitoring application gauges the effectiveness of a station's vapor recovery equipment through continuous monitoring of gasoline vapors during fueling operations.
- Secondary containment monitoring application continuously monitors the interstitial spaces of double wall tanks, lines and sumps, and notifies station owners when a release of product into the environment has occurred.

Capabilities

- The TS-550 and TS-5000 are built on an established open system software platform.
- Standard ethernet connection allows easy integration to existing wide area networks.
- XML-based software allows remote access to data without software.
- Graphical touch screen LCD allows text to be displayed in native language.
- Generic interface modules give flexibility in configuring station monitoring requirements.
- E-mail notification gives station owners real-time status information.
- Multiple printing options give flexibility in style and format of reports.
- Monitor back-up generators for fuel inventory control, run status reports, and continuous leak detection.

Ordering Information

Ordering Guide

Console model, software, and hardware options can be listed separately or combined when ordering. Systems shipped from the factory will list the combined part number. Complete console part numbers have a specific order and are created using the following guidelines:

TX DPMIE / TRLVBS

TX = Base Model Options

T550 = TS-550 base console
T5000 = TS-5000 base console

DPMIE = Hardware Options (choose all that apply)

D = Display
P = Printer
M = Internal modem
I = Dispenser interface module*
(or)
E = LON™ module*

TRLVBS = Software Options (choose all that apply)

T = SCALD 24-hour tank testing
R = Reconciliation/Auto-calibration
L = Line leak detection
V = Vacuum assisted vapor recovery monitoring*
(or)
B = Balance vapor recovery monitoring*
S = Secondary containment monitoring
C = DEF recirculation, scheduling, and timer conditions

Example: T550DPMI/TRLVS = TS-550 base console with display, with printer, with internal modem, with dispenser interface module, with SCALD, with reconciliation/autocalibration, with line leak detection, with vacuum assisted vapor recovery monitoring, with secondary containment monitoring.

*Only one dispenser interface module or LON™ module can be installed per console and only one vapor recovery monitoring option may be chosen per console.

Ordering Information - continued

TS-550

Model	Description
T550	TS-550 base console without display and printer
T550D	TS-550 base console with display and without printer
T550DP	TS-550 base console with display and printer

TS-5000

Model	Description
T5000	TS-5000 base console without display and printer
T5000D	TS-5000 base console with display and without printer
T5000DP	TS-5000 base console with display and printer

Expansion Console

Model	Description
TS-EXPC	Secondary console to add eleven additional plug-in modules to the primary TS-550/5000 console, comes without a display or printer
TS-EXPC2	Secondary console to add six additional plug-in modules to the primary TS-550/5000 console, comes without display or printer

TS-550 and TS-5000 Console Hardware and Software Options

TS-550/5000 consoles come standard with the ability to perform in-tank static leak detection. The following software and hardware options can be added to customize your console. The internal hardware options will be factory installed when ordered with the console.

Internal Hardware Options

Model	Description
TS-DIMIB	(I) Internal dispenser interface module, dispenser interface cable must be ordered separately
TS-LON	(E) LON™ communication module, IFSF protocol capability
TS-MDMIB	(M) Internal modem, includes fax and data software capability

Note: Only one TS-DIM or TS-LON module can be installed per console.

Internal Software Options

Model	Description
TS-TT	(T) Statistical Continuous Automatic Leak Detection, 24 hour continuous tank testing software
TS-TRAC	(R) Tank inventory reconciliation and autocalibration
TS-ELLD	(L) Electronic line leak detection
TS-VRM	(V) Vapor recovery monitoring, ISD
TS-VRMB	(B) Vapor recovery monitoring for balance sites (VRM 1.1)
TS-SCM	(S) Secondary containment monitoring
TS-CON	(C) DEF recirculation, scheduling, and timer conditions

TS-5 FUEL MANAGEMENT SYSTEM

The INCON™ brand TS-5 fuel management system provides inventory and leak detection for up to 12 storage tanks.

Highlights

- Low cost, compact console.
- Monitors up to 12 tanks.
- Continuous inventory monitoring and tank testing through proven magnetostrictive probe technology.
- Highest rated continuous 24 hour leak detection (SCALD) in the industry.
- Density measurement and alarm capabilities.
- Standard communication ports including ethernet, two RS-232 and USB.
- Internal fax and data modem options.
- Generates inventory, compliance, and fuel management reports.

Applications

The fuel management system has been designed to monitor tank tightness and gather inventory information.

- Third party approved volumetric leak detection (Pd = 99.9% at 0.2 gph).
- Can provide dispenser information and automate reconciliation when used in conjunction with the dispenser interface module.
- Provides accurate inventory information, including reports that can be used to better schedule deliveries.
- Multi-purpose relays can be used for outputs to overfill alarms and external audible and visual indicators.

Specifications

- Number of tanks monitored: 12
- Input channels: 2
- Output only channels: 2
- Display type: Touch screen LCD
- Applicable liquids: Petroleum, chemicals, and hazardous waste
- Level units: Inches, centimeters, and millimeters
- Volume units: Gallons or liters
- Display size: 320 × 240 pixels
- Power requirements: 110 to 220 VAC, +15%, -10%, 150 Watt maximum, 1.5 Amps
- Operating temperature: 32° to 104 °F (0° to 40 °C)
- Storage temperature: -4° to 140 °F (-20° to 60 °C)
- LCD backlight contains mercury, dispose of properly

Capabilities

The fuel management system is built on an established open-system software platform.

- Standard ethernet connection allows easy integration to existing wide area networks.
- XML-based software allows remote access to data without additional software.
- Graphical touch screen LCD allows text to be displayed in native language.
- E-mail notification gives station owners real-time status information.
- Monitor back-up generators for fuel inventory control, run status reports, and continuous leak detection.

Approvals

- UL, cUL, ATEX, IECEx
- Third party certification of leak detection capabilities.

Ordering Information

Ordering Guide

Console model, software, and hardware options can be listed separately or combined when ordering. Systems shipped from the factory will list the combined part number. Complete console part numbers have a specific order and are created using the following guidelines:

T5 DMIE / TR

T5 = Base Model

T5 = TS-550 base console, 110 or 200 VAC.

DMIE = Hardware Options (choose all that apply)

D = Display

M = Internal modem

I = Dispenser interface module*

(or)

E = LON™ module*

TR = Software Options (choose all that apply)

T = SCALD 24-hour tank testing

R = Reconciliation/Autocalibration

*Only one dispenser interface module or LON™ module can be installed per console.

Example: T5DMI/TR = TS-5 base console with display, with internal modem, with dispenser interface module, with SCALD and with reconciliation/autocalibration.

TS-5

Model	Description
T5	TS-5 base console without display
T5D	TS-5 base console with display

TS-5 Console Hardware and Software Options

TS-5 console comes standard with the ability to perform in-tank static leak detection. The following software and hardware options can be added to customize your console. The internal hardware options will be factory installed when ordered with the console.

Internal Hardware Options

Model	Description
TS-DIMIB5	(I) Internal dispenser interface module, dispenser interface cable must be ordered separately
TS-LON5	(E) LON™ communication module, IFSF protocol capability
TS-MDMIB	(M) Internal modem, includes fax and data software capability

Note: Only one TS-DIMIB or TS-LON module can be installed per console.

Internal Hardware Options

Model	Description
TS-TT	(T) Statistical Continuous Automatic Leak Detection, 24 hour continuous tank testing software
TS-TRAC	(R) Tank inventory reconciliation and autocalibration

FUEL MANAGEMENT SYSTEM CONSOLE ACCESSORIES

T5 Series Fuel Management System Console Interface Modules

T5 Series consoles come standard with a power supply module and a controller module. Additional interface modules can be installed. Interface modules ordered with a console will be installed at the factory. The following guidelines must be followed:

- TS-5: Comes standard with one TS-PRB module. No additional modules may be installed.
- TS-550 /TS-550E: Six total modules can be installed with a maximum of five intrinsically safe modules and a maximum of three of any one kind of module.
- TS-5000 /TS-5000E: Eleven total modules can be installed with a maximum of ten intrinsically safe modules and a maximum of three of any one kind of module.

Intrinsically Safe Modules

Part Number	Description
TS-PRB	12 input probe module, LL2 Series mag probes, VFM flow meters and DMS Mag sensors
TS-2WSNS	12 input 2-wire sensor module, TSP-ULS, TSP-UHS and TSP-HLS sensors
TS-3WSNS	8 input 3-wire sensor module, TSP-EIS, TSP-DIS, TSP-DDS, TSP-DTS, TSP-HIS, TSP-MWS and TSP-DVS sensors. Can also support 2-wire sensors
TS-420IB	8 input 4-20 mA module, LSU500 transducers and VPS and SCCM pressure sensors

Non-Intrinsically Safe Modules

Part Number	Description
TS-ACI	12 input AC input module, dispenser hook inputs
TS-RLY	8 output relay module, SCCM solenoid and STP control
TS-10ARLY	6 output 10 Amp relay output module, dispenser power
TS-IO	Input output module, 4 output 4-20 mA, 8 input 3-240 VAC/DC
TS-420EXP	8 input 4-20 mA module, LSU500E transducers and external devices

Note: TS-RLY Module is not required for STP control when utilizing turbine pump interface (TPI) communications. The TS-420EXP module requires Controller Module software version 9.5 or greater Do not include Power Supply and Controller Module when calculating total modules allowed

TS-LS500 AutoLearn™ with Statistical Line Leak Detection

Pressurized line leak detection provides automatic 3.0 gph hourly, 0.2 gph monthly and 0.1 gph annual precision line leak detection for T5 Series (except TS-5) consoles. Statistical Line Leak Detection (SLLD) is a standard feature that can provide 0.2 gph monthly results on even high throughput lines. Available in intrinsically safe and explosion proof models. Use explosion proof when low voltage conduit is not available. The TS-420IB or TS-420EXP, TS-ACI and TS-RLY module and TS-ELLD software option must be ordered and installed in the fuel management system console.

Intrinsically Safe

For new installations where separate low voltage conduits can be used. Use TS-420IB module.

Part Number	Description
TS-LS500/2	2-line transducer kit
TS-LS500/3	3-line transducer kit
TS-LS500/4	4-line transducer kit

Note: Using turbine pump interface (TPI) communications eliminates the need for a TS-RLY module; FFS intelligent controllers required.

Explosion Proof

For retrofit installations where only a high voltage conduit can be used. Use TS-420EXP module.

Part Number	Description
TS-LS500E/2	2-line transducer kit, explosion proof
TS-LS500E/3	3-line transducer kit, explosion proof
TS-LS500E/4	4-line transducer kit, explosion proof

Note: Using turbine pump interface (TPI) communications eliminates the need for a TS-RLY module; FFS intelligent controllers required.

Dispenser Interface Module Cables

Part Number	Description
TSP-WDCBL	Wayne™ cable
TSP-TDCBL	Tokheim™ cable
TSP-GDCBL	Gilbarco™ cable
TSP-GSDCBL	Gilbarco™ G-Site™ cable
TSP-BDBCL	Bennett® 515 only cable

Alternative Fuels Accessories

Part Number	Description
TS-AFALNIP	Leak generator needle valve kit required for E85 installations

Bennett® is a registered trademark of Bennett Pump Company.
Wayne™ is a trademark of Dresser Equipment Group Inc.
Gasboy™, Gilbarco™, Encore™, and G-Site™ are trademarks of Gilbarco Inc.
Tokheim™ is a trademark of Tokheim Holding B.V.

Pipe Supplies

Part Number	Description
Thermal Printer Supplies	
TS-TP2	One box of 5 rolls of thermal printer paper for T5 Series and Tank Sentinel® consoles
TS-TP2C	One case (100 rolls) of thermal printer paper for T5 Series and Tank Sentinel® consoles
Impact Printer Supplies	
TS-TP5000	TS-550 and TS-5000 impact printer paper
TS-TP5000C	12 rolls of impact printer paper
TS-INKRB	TS-550 and TS-5000 ink ribbon

Note: T5 Series consoles shipped after 8/2010 have thermal printers.

Secondary Containment Monitoring

The secondary containment monitoring system is designed to detect leaks in double-wall tanks, sumps, and piping. TS-420IB, TS-RLY and TS-ACI modules and the TS-SCM software option must be ordered and installed in the tank gauge console.

Sensor Modules

Part Number	Description
TS-SCCM/1	Single channel secondary containment control module
TS-SCCM/2	Dual channel secondary containment control module
TS-SCMCAL	Leak generator kit, one per station
VS-SCCM/1	220 VAC single channel secondary containment control module
VS-SCCM/2	220 VAC dual channel secondary containment control module

Install Kit

Part Number	Description
TSP-SCLSI	Product, vapor line, and sump containment install kit
TSP-SCTK2	Tank containment install kit for 2" risers, in-tank hose sold separately
TSP-SCTK2B	Tank containment install kit for 2" risers with BSP threads, in-tank hose sold separately
TSP-SCTK4	Tank containment install kit for 4" risers, in-tank hose sold separately
TSP-SCTK4B	Tank containment install kit for 4" risers with BSP threads, in-tank hose sold separately

Accessories

Part Number	Description
TSP-SCBRB	Five 1/4" NPT barbed fittings
TSP-SCBRBT	1/4" NPT barbed T-fitting
TSP-SCCLP	Five hose clamps
TSP-SCTB25	25' hose
TSP-SCTB50	50' hose
TSP-SCTB100	100' hose
TSP-SCVLV	Five Schreader valves

Upgrading Installed Fuel Management System Consoles

Two types of upgrades can be done on a fuel management system console: feature upgrades and software upgrades. The latest software versions are included with all feature upgrades. Most feature upgrades require ordering a software option, hardware options, and interface modules. Some modules may already be installed.

Feature Upgrade

Upgrade	Software	Hardware	Interface Module
Internal modem		TS-MDMIB internal modem	
24 hour tank testing	TS-TT SCALD tank testing		
Line leak	TS-ELLD electronic line leak detection	Appropriate TS-LS500/N transducer kit	TS-RLY module, not needed with TPI TS-420IB module TS-ACI module
Tank inventory reconciliation	TS-TRAC tank inventory reconciliation and autocalibration	TS-DIMIB module Appropriate DIM interface cables	
Secondary containment monitoring	TS-SCM secondary containment monitoring	Appropriate TS-SCCM modules, installation kits and accessories	TS-ACI module TS-RLY module TS-420IB module
Vapor recovery monitoring (ISD)	TS-VRM vapor recovery monitoring	TS-VFM flow meters TS-VPS pressure sensor TS-DIMIB dispenser interface	TS-ACI module (not needed w/ VRM 1.2) TS-RLY or TS-10ARLY module TS-PRB probe module TS-420IB module

Note: When placing an order for a feature upgrade, the serial number of the console to be upgraded must be supplied.

Software Version Upgrade Only

Part Number	Description
TSA-UPGMS	Software version upgrade shipped on a USB memory stick

COLIBRI™ TANK MONITOR

The INCON™ brand Colibri™ tank monitor is the ideal solution for the fueling station owner who requires basic, straightforward functionality in a fuel inventory monitoring system. The Colibri™ system monitors fuel density and inventory levels in up to six tanks and provides accurate, reliable information without manually taking tank readings. Additional features communicate the status of tank contents, including volume, temperature, mass, water level, and continuous tank leak detection. The Web interface feature allows authorized users access to tank information from any computer connected to the internet or wide area network, as well as custom alerts which can be sent to email or mobile devices.

Highlights

- The highest quality, best value solution available for any fueling station that requires essential tank monitoring capabilities.
- Monitors fuel levels and density measurements in up to six tanks.
- Static and continuous tank leak detection capabilities.
- Standard communication ports.
- External USB printer support.
- Web interface for remote access.
- Programmable email notification of alarms and events.
- Compact size provides installation location flexibility.
- Autocalibration can recreate missing or inaccurate tank strapping charts.

Specifications

- Number of tanks monitored: 6
- Output channels: 2
- Display type: 5.6" (142 mm) color LCD touch screen
- Alarm: Internal audible alarm
- LEDs: Alarm, warning, and power
- Applicable liquids: petroleum, chemicals, and hazardous waste
- Level units: centimeters, millimeters and inches
- Volume units: liters or gallons (mass with density option)
- Power requirements: 94 to 264 VAC, 50/60 Hz 1.0 Amps
- Operating temperature: 0° to 40 °C (32° to 104 °F)
- Humidity: 0% to 95% non-condensing
- Dimensions: 7.27"/185 mm (Height), 11.92"/303 mm (Width), 2.24"/57 mm (Depth)

Standard Capabilities

- Inventory and delivery management
- Static tank leak detection
- High, low, and water alarm set points
- Available with or without display
- Web interface and email notifications

Optional Capabilities

- SCALD 24 hour tank leak detection
- Inventory reconciliation/Tank autocalibration
- Density and mass measurement

Approvals

- UL, cUL, ATEX, IECEx
- Third party certification of leak detection capabilities.

Ordering Information

Ordering Guide

Console model, software, and hardware options can be listed separately or combined when ordering. Systems shipped from the factory will list the combined part number. Complete console part numbers have a specific order and are created using the following guidelines:

CL6 D / TR
CL6 = Base Colibri Model
D = Display Option
TR = Software Options (choose all that apply)
T = SCALD 24-hour tank testing
R = Reconciliation/Autocalibration

Example: CL6D/TR = Colibri base console with display, with SCALD, with Reconciliation/Autocalibration.

Colibri Consoles

Model	Description
CL6	Six channel Colibri console without display
CL6D	Six channel Colibri console with display

Internal Software Options

Model	Description
CL-TT	(T) Statistical Continuous Automatic Leak Detection (SCALD), 24 hour continuous tank testing software
CL-TRAC	(R) Tank inventory reconciliation and autocalibration software

Upgrading Installed Colibri System

Feature upgrade: The Colibri console can be upgraded after installation to add any of the available internal software options. The serial number of the console as well as the part number of the option being ordered must be supplied.

Software upgrade: The latest version of the Colibri software can be shipped on a memory stick.

Model	Description
CL-UPGMS	Colibri Software Version Upgrade on a USB memory stick

Note: The latest version of the Colibri software is also available for download at franklinfueling.com at any time.

TS-EMS ENVIRONMENTAL MONITORING SYSTEM

The TS-EMS environmental monitoring system can perform in-station diagnostic vapor recovery monitoring (VRM) and secondary containment monitoring (SCM) and interface to an existing tank gauge.

Specifications

- Number of dispensers monitored: 16.
- Input channels: 2.
- Output only channels: 2.
- Display type: touch screen LCD.
- Printer type: impact.
- Volume units: gallons or liters.
- Display size: 320 × 240 pixels.
- Power requirements: 110 to 220 VAC, +15%, -10%, 150 Watt maximum, 1½ Amps.
- Operating temperature: 32° to 104 °F (0° to 40 °C).
- Storage temperature: -4° to 140 °F (-20° to 60 °C).
- LCD backlight contains mercury, dispose of properly.

Applications

The flexible architecture of the TS-EMS allows multiple applications to run concurrently, satisfying multiple monitoring needs.

- The vapor recovery monitoring application gauges the effectiveness of a station's vapor recovery equipment through continuous monitoring of gasoline vapors during fueling operations.
- Secondary containment monitoring application continuously monitors the interstitial spaces of double wall tanks, lines and sumps, and notifies station owners when a release of product into the environment has occurred.

Highlights

- Standalone ISD system.
- Approved by the California Air Resources Board EO VR-202 & VR-208.
- Includes TS-VRM vapor recovery monitoring software and optional secondary containment monitoring.
- Dispenser-based disabling prevents the entire site from shutting down in the event of an EVR failure.
- Wired-less Flow Meter and Pressure Sensor interface option.
- Ethernet-ready, web-based remote access provides the user with remote access to VRM status information, reports, and alarm information using any web browser.
- Create custom rules to send e-mails and text messages on alarms and events directly from the console to service and compliance personnel.
- User-friendly touch screen interface with icon-based navigation.
- Scalable open architecture for easy and cost-saving future upgrades.

Capabilities

The TS-EMS is built on an established open-system software platform.

- Standard Ethernet connection allows easy integration to existing wide area networks.
- XML-based software allows remote access to data without additional software.
- Graphical touch screen LCD allows text to be displayed in native language.
- Generic interface modules give flexibility in configuring station monitoring requirements.
- E-mail notification gives station owners real-time status information.
- Multiple printing options give flexibility in style and format of reports.

Approvals

- UL, cUL, ATEX, IECEx
- Third party certification of leak detection capabilities

TS-EMS Ordering Guide

The TS-EMS environmental monitoring system comes standard with display, printer, and dispenser interface module. An internal TS-MDMIB modem can be added as a hardware option. Order the TEMSDPI/VS if the secondary containment monitoring software option is required.

TS-EMS Console Hardware and Software Options

TS-EMS consoles come standard with the ability to perform vapor recovery monitoring. The following software and hardware options can be added to customize your console. The internal hardware options will be factory installed when ordered with the console.

Internal Hardware Options

Part Number	Description
TS-MDMIB	(M) Internal modem, includes fax and data software capability

Internal Software Options

Part Number	Description
TS-SCM	(S) Secondary containment monitoring

TS-EMS Fuel Management System Console Interface Modules

TS-EMS consoles come standard with a power supply module, a controller module, and a model dependent set of interface modules that can support up to 6 or 12 dispensers. In some situations non-standard module configurations may be required. Additional modules will be shipped separately from the EMS console. Six total modules can be installed with a maximum of four intrinsically safe modules and a maximum of three of any one kind of module.

Intrinsically Safe Modules

Part Number	Description
TS-PRB	12 input probe module, VFM flow meters
TS-4201B	8 input 4-20 mA module, VPS and SCCM pressure sensors

Non-Intrinsically Safe Modules

Part Number	Description
TS-RLY	8 output relay module, low power dispensers, and SCCM solenoids
TS-10ARLY	6 output 10 Amp relay output module, high power dispensers and SCCM solenoids

External Modules

Part Number	Description
TS-DTU/P	Data transfer unit for wired-less VFM and VPS communications

Note: Order one TS-DTU/P and one TS-DRK/x install kit per dispenser. Order one additional TS-DTU/P for the console.

Model	Description
TEMSDPI/V	TS-EMS console with display, printer, DIM, VRM software, and one TS-PRB, TS-420IB and TS-10ARLY
TEMS2DPI/V	TS-EMS console with display, printer, DIM, VRM software, one TS-PRB and TS-420IB, and two TS-10ARLY
TEMS3DPI/V	TS-DTU ready TS-EMS console with display, printer, DIM, VRM software, and one TS-10ARLY module
TEMSDPI/VS	TS-EMS console with display, printer, DIM, VRM and SCM software, and one TS-PRB, TS-420IB and TS-10ARLY
TEMS2DPI/VS	TS-EMS console with display, printer, DIM and SCM software, one TS-PRB and TS-420IB, and two TS-10ARLY
TEMSDPI/B	TS-EMS console for balance sites with display, printer, DIM, VRM (1.1) software and one TS-PRB, TS-ACI, TS-420IB and TS-10ARLY
TEMS2DPI/B	TS-EMS console for balance sites with display, printer, DIM, VRM (1.1) software, one TS-PRB and TS-420IB, two TS-ACI and TS-10ARLY

Notes:

1. 1. Appropriate DIM cable must be ordered separately.
2. TEMS and TEMS3 systems can support up to six dispensers. TEMS2 systems can support up to twelve dispensers. All models can be expanded to support up to 16 dispensers with additional modules.
3. The appropriate number of TS-VFM vapor flow meters and one TS-VPS vapor pressure sensor must be ordered separately to perform vapor recovery monitoring.
4. TS-ACI modules and hook signal wiring are only required for balance site installs.

Dispenser Interface Module Cables

Part Number	Description
TSP-WDCBL	Wayne™ cable
TSP-TDCBL	Tokheim™ cable
TSP-GDCBL	Gilbarco™ cable
TSP-GSDCBL	Gilbarco™ G-Site™ cable
TSP-BDCBL	Bennett® 512 cable

Bennett® is a registered trademark of Bennett Pump Company.
Wayne™ is a trademark of Dresser Equipment Group Inc.
Gasboy™, Gilbarco™, Encore™, and G-Site™ are trademarks of Gilbarco Inc.
Tokheim™ is a trademark of Tokheim Holding B.V.

IN-STATION DIAGNOSTICS (ISD)

The INCON vapor recovery monitoring (VRM) option meets or exceeds all ISD requirements for ensuring that all components of the vapor recovery system are functioning normally. Recorded sales transactions are compared to data obtained from a TS-VFM vapor flow meter installed in each dispenser to verify that equivalent vapors are recovered from the vehicle when fuel is dispensed. The pressure of the vapor containment space is constantly monitored by the TS-VPS vapor pressure sensor and tested for over pressure and leakage conditions. Local and remote notification options alert the user of abnormalities and dispenser-based disabling keeps the rest of the site up and running when a single dispenser EVR system has a problem. The Wired-less option, featuring the TS-DTU, prevents the need to break concrete to install new conduit or even pull wires and reduces the cost of the console.

Highlights

- Dispenser-based disabling prevents the entire site from shutting down in the event of an EVR failure.
- Wired-less Flow Meter and Pressure Sensor interface option when conduit is not present.
- Ethernet-ready, web-based remote access provides the user with remote access to VRM status information, reports and alarm information using any web browser.
- Create custom rules to send e-mails and text messages on alarms and events directly from the console to service and compliance personnel.
- User-friendly touch screen interface with icon-based navigation.
- Scalable open architecture for easy and cost-saving future upgrades.

TS-DTU

- Uses dispenser power wires to transmit data.
- Multi-industry proven power line communications technology.
- Save weeks of installation time.
- Save thousands of dollars in costly conduit installation and avoid damaged and blocked conduit.
- Save on the cost of the console due to a reduction in modules needed.
- No disruption of forecourt by having to break concrete.
- No need to pull wires.
- Will not interfere with dispenser operation.
- UL approved for installation in most common dispenser models.
- Works even if some dispensers are on different phases.

TS-5000

TS-550

TS-EMS

Vapor Flow Meter

Vapor Pressure Sensor

Data Transfer Unit

Model	Description
TS-VFM	Vapor flow meter, one per dispenser
TS-VPS	Vapor pressure sensor, one per site
TS-VRM	Vapor recovery monitoring software
TS-VRMB	Vapor recovery monitoring for balance sites (VRM 1.1)
TS-DTU/P	Data transfer unit for wired-less VFM and VPS communications
TS-DRK/A	Gilbarco™ Advantage dispenser retrofit install kit
TS-DRK/E	Gilbarco™ Encore™ dispenser retrofit install kit
TS-DRK/T	Tokheim™ dispenser retrofit install kit
TS-DRK/W	Wayne™ dispenser retrofit install kit

Notes:

1. Approved by California Air Resources Board EO VR-202 & VR-208.
2. Minimum module requirements include one TS-PRB, TS-420IB, TS-RLY or TS-10ARLY.
3. TS-VRM software is included in the TS-EMS console.
4. Order one TS-DTU/P and one TS-DRK/x install kit per dispenser. Order one additional TS-DTU/P for the console. Controller Module software 9.5 or greater required.
5. Consoles using the wired-less option do not require the TS-PRB or TS-420IB modules for communication with the TS-VFM and TS-VPS
6. TS-ACI modules and hook signal wiring are only required for balance site applications.

Wayne™ is a trademark of Dresser Equipment Group Inc.
Gasboy™, Gilbarco™, Encore™, and G-Site™ are trademarks of Gilbarco Inc.
Tokheim™ is a trademark of Tokheim Holding B.V.

TS-1001 FULL FEATURE COMPLIANCE CONSOLES

The TS-1001 consoles feature business management and environmental compliance capabilities. They offer inventory, leak detection, reporting, and alarm notification.

Highlights

- Monitors up to 4 tanks.
- Designed on an open architecture platform that is easily expandable for additional capabilities.
- Low cost, compact console handles a wide range of applications and is easily programmed through multi-purpose function keys to meet site-specific criteria.
- Internal high-speed fax/data modem capability allows remote access from System Sentinel™ and System Sentinel AnyWare™.
- Executes automatic system check and notifies user if the unit is not functioning properly and performs continuous leak testing, no station down time required.

Specifications

- Number of tanks monitored: 4.
- Input channels: 2.
- Output only channels: 2 (10*).
- Sensor inputs: 12.
- Dimensions: 11" × 12" × 4".
- Display type: Alphanumeric LCD.
- Applicable liquids: petroleum, chemicals, and hazardous waste.
- Level units: Inches or millimeters.
- Volume units: gallons or liters.
- Temperature units: degrees Fahrenheit or Celsius.
- Display size: 2 lines of 40 characters.
- Power requirements:
  115 VAC - +15%, -10%, 100 Watts maximum, 1 Amp maximum.
  230 VAC - +15%, -10%, 100 Watts maximum, 0.5 Amp maximum.
- Operating temperature: 32° to 122 °F (0° to 50 °C).
- Storage temperature: -4° to 140 °F (-20° to 60 °C).
- Number of LLDs supported: 4.
- Printer type: 24 column thermal.

Approvals

- UL, cUL, ATEX
- Third party certification of leak detection capabilities

Applications

The automatic tank gauge has been designed to monitor tank tightness, gather inventory information and assist with multiple environmental compliance issues.

- Third party approved volumetric leak detection (Pd = 99.9% at 0.2 gph).
- Can provide dispenser information and automate reconciliation when used in conjunction with the dispenser interface module.
- Provides accurate inventory information including reports that can be used to better schedule deliveries.
- Multi-purpose relays can be used for outputs to overfill alarms and external audible and visual indicators.

Capabilities

The TS-1001 has programmable settings and is capable of monitoring up to four tanks.

- Offers a wide range of advanced communication options.
- Expanded, backlit LCD display with two lines of 40 columns.
- Supports multiple languages.
- Supports English and metric units.
- Generates numerous system warnings and tank alarms to quickly notify the user of any potential problems.
- Supports important generator and fuel management features.

*Maximum number when including additional options.

TS-1001 Ordering Guide

Console model, software, and hardware options can be listed separately or combined when ordering. Systems shipped from the factory will list the combined part number. Complete console part numbers have a specific order and are created using the following guidelines:

XX PM / A B C CLR

XX = Model

T1 = TS-1001, 120 VAC.
V1 = TS-1001, 220 VAC.

PM = Hardware Options

P = Printer, standard.
M = Internal modem.

A B C CLR = Software Options

A = 0, 2, 4 tanks,
B* = S, SCALD, or G, generator.
C** = D - data, F - fax/data software.
C = Continental version.
L = Line leak detection.
R = Reconciliation.

*SCALD and generator options are mutually exclusive. The SCALD option is not needed for the generator model.

**Data and fax/data modem options are mutually exclusive.

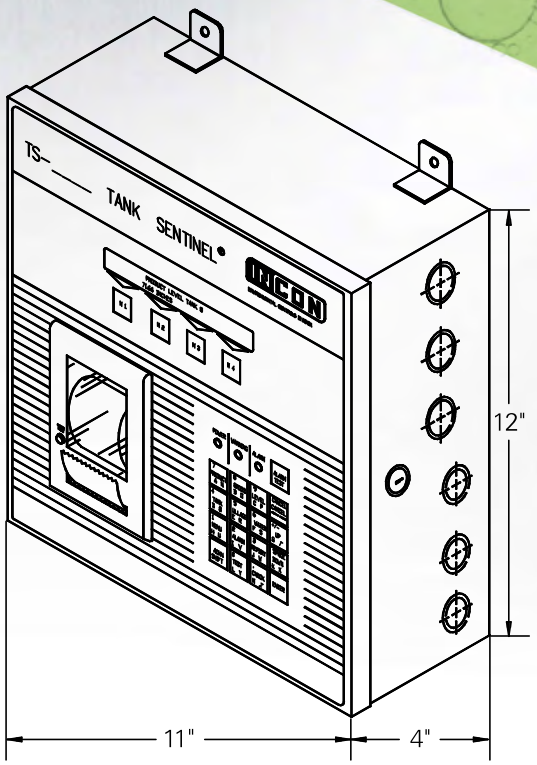

TS-1001

TS-1001, 110 VAC Models

Model	Description
T1P/0	Leak monitor with 12 sensor inputs and printer
T1P/2	ATG, up to 2 tanks with 12 sensor inputs and printer
T1P/4	ATG, up to 4 tanks with 12 sensor inputs and printer

TS-1001, 220 VAC Models

Model	Description
V1P/0C	Leak monitor with 12 sensor inputs and printer
V1P/2C	ATG, up to 2 tanks with 12 sensor inputs and printer
V1P/4C	ATG, up to 4 tanks with 12 sensor inputs and printer

TS-1001/G FIXED FEATURE GENERATOR TANK MONITORING CONSOLE

The TS-1001/G back-up generator tank monitoring system provides fuel inventory control, runs status reports, and continuous leak detection.

Specifications

- Number of tanks monitored: 2.
- Input channels: 2.
- Output only channels: 2 (10*).
- Sensor inputs: 12.
- Dimensions: 12" × 11" × 4".
- Display type: Alphanumeric LCD.
- Applicable liquids: Petroleum, chemicals and hazardous waste.
- Level units: Inches or millimeters.
- Volume units: Gallons or liters.
- Temperature units: Degrees Fahrenheit or Celsius.
- Display size: 2 lines of 40 characters.
- Power requirements:
  115 VAC - +15%, -10%, 100 Watts maximum, 1 Amp maximum.
  230 VAC - +15%, -10%, 100 Watts maximum, 0.5 Amp maximum.
- Operating temperature: 32 ° to 122 °F (0° to 50 °C).
- Storage temperature: -4 ° to 140 °F (-20 ° to 60 °C).
- Number of LLDs supported: 8.
- Printer type: 24 column thermal.

TS-1001 Ordering Guide

Console model, software, and hardware options can be listed separately or combined when ordering. Systems shipped from the factory will list the combined part number. Complete console part numbers have a specific order and are created using the following guidelines:

XX PM / 2G B C

XX = Model

T1 = TS-1001, 120 VAC.
V1 = TS-1001, 220 VAC.

PM = Hardware Options

P = Printer, standard.
M = Internal modem.

2G B C = Software Options

B* = D - data, F - fax/data software.
C = Continental version.

*Data and fax/data modem options are mutually exclusive.

Capabilities

- Generates inventory, compliance, and fuel management reports.
- Performs continuous leak detection.
- Supports English and metric units.
- Generates numerous system warnings and tank alarms to quickly notify the user of any potential problems.
- Can open and shut appropriate valves through multi-purpose relays.

*Maximum number when including additional options.

Approvals

- UL, cUL, ATEX
- Third party certification of leak detection capabilities

TS-1001/G, 110 and 220 VAC Models

Model	Description
T1P/2G	One to two tank configuration with generator back-up capability (110 VAC)
V1P/2G	One to two tank configuration with generator back-up capability (220 VAC)

TS-504 FIXED FEATURE INVENTORY CONTROL CONSOLES

This inventory control family of products offers a feature-rich and cost-effective solution for continuous inventory management of fuel sites where in-tank leak detection is not required.

Specifications

- Number of tanks monitored: TS-504 - 4.
- Input channels: 2.
- Output only channels: 2 (10*).
- Sensor inputs: 8.
- Dimensions: 12" × 11" × 4".
- Display type: Alphanumeric LCD.
- Applicable liquids: Petroleum, chemicals and hazardous waste.
- Level units: Inches or millimeters.
- Volume units: Gallons or liters.
- Temperature units: Degrees Fahrenheit or Celsius.
- Display size: 2 lines of 40 characters.
- Power requirements:
  115 VAC - +15%, -10%, 100 Watts maximum, 1 Amp maximum.
  230 VAC - +15%, -10%, 100 Watts maximum, 0.5 Amp maximum.
- Operating temperature: 32° to 122 °F (0° to 50 °C).
- Storage temperature: -4° to 140 °F (-20° to 60 °C).
- Printer type: 24 column thermal.

Applications

The TS-504 and family of tank monitors is the perfect solution for monitoring and controlling liquid levels in aboveground tanks at:

- Retail fueling sites.
- Fuel distribution depots.
- Heating oil storage terminals.
- Bulk storage locations for other motor fluids.
- Bulk fuel terminals.
- Chemical storage plants.
- Many other inventory control applications not requiring in-tank leak detection.

TS-1001 Ordering Guide

- Cost-effective system provides up-to-the-minute inventory information.
- State-of-the-art communication capability.
- Feature-rich programming generates detailed inventory management reports.
- Fully compatible with System Sentinel™ and System Sentinel AnyWare™ remote monitoring software.

Capabilities

- Provides real-time, accurate inventory and delivery information for each tank monitored.
- Supports up to 12 sensors for sumps, interstitial spaces and test well applications.
- Can control remote alarms and pumps via multi-purpose, high current relays.
- Self-calibration and diagnostic features quickly notify users of potential problems.
- Delivers cost-effective overfill protection.
- Can provide sales throughput information and automated reconciliation of sales and consumption data when used with the INCON dispenser interface module.
- Multiple monitors can be easily networked to support large tank farms and bulk terminals with more than eight tanks.
- Can be remotely monitored and controlled via System Sentinel™ remote fuel management software.
- Supports multiple languages as well as English and metric units.

*Maximum number when including additional options.

Approvals

- UL, cUL, ATEX
- Third party certification of leak detection capabilities

TS-504 and TS-508 Ordering Guide

Console model, software, and hardware options can be listed separately or combined when ordering. Systems shipped from the factory will list the combined part number. Complete console part numbers have a specific order and are created using the following guidelines:

XXXX PM / Y A CLR

XXXX = Model

T504 = TS-504, 120 VAC.
V504 = TS-504, 220 VAC.

PM = Hardware Options

P = Printer, standard.
M = Internal modem.

Y A CR = Software Options

Y = 4 tanks, TS-504 - 4.

A* = D - data, F - fax/data software.
C = Continental version.
R = Reconciliation.
*Data and fax/data modem options are mutually exclusive.

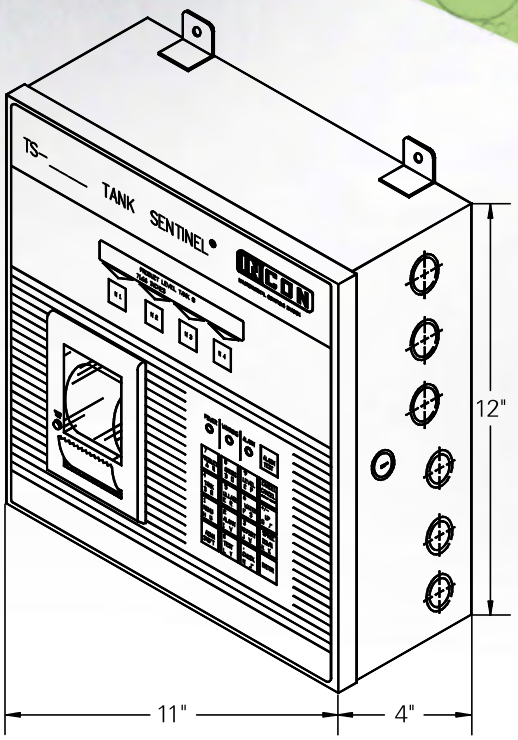

TS-504/508

TS-504 and TS-508, 110 VAC Models

Model	Description
T504/4	ATG, up to 4 tanks with 8 sensor inputs
T504P/4	ATG, up to 4 tanks with 8 sensor inputs and printer

TS-504 and TS-508, 220 VAC Models

Model	Description
V504/4C	ATG, up to 4 tanks with 8 sensor inputs
V504P/4C	ATG, up to 4 tanks with 8 sensor inputs and printer

TS-LS500 AUTOLEARN™ ELECTRONIC LINE LEAK DETECTION

INCON™ brand TS-LS500 AutoLearn™ electronic line leak detection (ELLD) learns the characteristics of each line, eliminating possible configuration errors and ensures unparalleled leak detection accuracy. It is an optional feature of T5 Series fuel management systems. The TS-LS500 AutoLearn™ ELLD system includes a statistical line leak detection (SLLD) feature which can be activated at high throughput sites that cannot accommodate the prolonged downtime necessary for static line leak detection testing.

Highlights

- Automatically learns exact pipeline characteristics.
- No pipe type and length programming required.
- Monitors flexible, steel, and/or fiberglass pipelines in any combination up to certified maximum values.
- Works with submersible pumps generating 25 psi or more.
- Automatically performs 3.0 gph, 0.2 gph and 0.1 gph line tests, as well as other line pressure checks.
- Includes the industry's only statistical line leak detection (SLLD).
- Positive submersible pump shutdown in the event of a leak.
- Optional feature of T5 Series fuel management system.
- Intrinsically safe and explosion-proof options.
- Dispenser hook isolation and turbine pump interface (TPI) pump control options.
- Remote access to line pressure, test, and alarm information.

Specifications

- Dimensions: 6¼"× 2" NPT
- Operating temperature: -40° to 149 °F (-40° to 66 °C)
- Operating pressure: 0 to 100 psi (0 to 689 kPa)
- Belden™ cable: #9363-22 AWG, #9364-20 AWG or #9365-18 AWG
- Maximum sensor to console cable distance: 500' (152.4 m)
- Sensor port fitting: 2" female NPT
- Sensor material: Anodized aluminum body and stainless steel sensor

Capabilities

- Performs a 3.0 gph leak and pressure test after every dispense cycle or 45 min. Positive shutdown of the affected turbine(s) on test failure.
- Performs a 0.2 gph monthly and 0.1 gph annual precision leak test during the thermally stable periods of dispensing. Optional positive shutdown of the affected turbine(s) on test failure.
- Performs pressure up, catch pressure, and other additional checks. Alarm only on test failure.

Approvals

- TS-LSU500: UL, cUL, ATEX, IECEx
- TS-LSU500E: UL, cUL
- Third party certification of leak detection capabilities.

Ordering Information

Minimum Console Requirements

- TS-550/5000, TS-550/5000 evo fuel management system
- TS-ELLD software options
- TS-ACI, TS-420IB or TS-420EXP, *TS-RLY Modules

* TS-RLY module is not required when utilizing turbine pump interface (TPI) communications.

Intrinsically Safe

For new installations where separate low voltage conduits can be used. Use TS-420IB module.

Model	Description
TS-LS500/2	2-line transducer kit
TS-LS500/3	3-line transducer kit
TS-LS500/4	4-line transducer kit

Explosion Proof

For retrofit installations where only a high voltage conduit can be used. Use TS-420EXP module.

Model	Description
TS-LS500E/2	2-line transducer kit, explosion proof
TS-LS500E/3	3-line transducer kit, explosion proof
TS-LS500E/4	4-line transducer kit, explosion proof

Note: Using turbine pump interface (TPI) communications eliminates the need for a TS-RLY module; Franklin Fueling Systems intelligent controllers required.

Alternative Fuels Accessories

For new installations where separate low voltage conduits can be used. Use TS-420IB module.

Model	Description
TS-AFALNIP	Leak generator needle valve kit required for E85 installations

TS-750 FIXED FEATURE TANK MONITORING AND COMPLIANCE KITS

The TS-750 kit is a complete, easy to order, and cost-effective solution for your environmental compliance needs. It provides inventory control and leak detection for sites with up to four underground storage tanks.

Highlights

- TS-750 compliance tank gauge includes printer and optional continuous 24 hour leak testing (SCALD).
- Capable of multiple alarm modes.
- Uses magnetostrictive technology probes for unparalleled accuracy.
- Reports product and water levels in tank.
- Temperature compensated.
- Will accommodate tanks up to 12 feet in diameter.
- Kits provide for easy ordering and great value.

Capabilities

- Provides real-time, accurate inventory and delivery information for each tank monitored.
- Can accommodate up to 8 sensors and 4 probes.
- Can control remote visual and audible alarms.
- Delivers cost-effective environmental compliance.
- Easily programmed to meet site-specific criteria.
- Consoles can be field upgraded to add SCALD or internal modem but not increase tanks.

Approvals

- UL, cUL, ATEX
- Third party certification of leak detection capabilities

Specifications

- Number of tanks monitored: 1, 2, 3 or 4.
- Output-only channels: 2.
- Sensor inputs: 8.
- Dimensions: 12" × 11" × 4".
- Display type: Alphanumeric LCD.
- Applicable liquids: Petroleum.
- Level units: Inches or millimeters.
- Volume units: Gallons or liters.
- Temperature units: Degrees Fahrenheit or Celsius.
- Display size: 2 lines of 40 characters.
- Power requirements:
  115 VAC - +15%, -10%, 100 Watts maximum, 1 Amp maximum.
  230 VAC - +15%, -10%, 100 Watts maximum, 0.5 Amp maximum.
- Operating temperature: 32° to 122 °F (0° to 50 °C).
- Storage temperature: -4° to 140 °F (-20° to 60 °C).
- Printer type: 24 column thermal.

The TS-750 kit consists of the TS-750 compliance monitor, probe(s), float(s), and installation kit. Please specify the diameter of each tank and the product stored in each tank when ordering. The following kits are currently available.

TS-750 Console Ordering Guide

The TS-750 is designed specifically for underground fuel storage tanks. When ordering, specify the number of tanks, the diameter of each tank and the product type for each tank. INCON will provide the appropriate TS-750 tank gauge, probes, floats, and installation kits for each site.

Console model, software, and hardware options can be listed separately or combined when ordering. Systems shipped from the factory will list the combined part number. Complete console part numbers have a specific order and are created using the following guidelines:

XXXX PM / Y A B C

XXXX = Model

T750 = TS-750, 120 VAC.
V750 = TS-750, 220 VAC.

PM = Hardware Options

P = Printer, standard.
M = Internal modem.

Y A B C = Software Options

Y = 1, 2, 3 or 4 tanks.
A = S, SCALD.
B* = D - data, F - fax/data software.
C = Continental version.
*Data and fax/data modem options are mutually exclusive.

TS-750 110 VAC Models

Model	Description
T750P/1	Single tank kit with 8 sensor inputs and printer
T750P/1S	Single tank kit with 8 sensor inputs, printer, and SCALD
T750P/2	Two tank kit with 8 sensor inputs and printer
T750P/2S	Two tank kit with 8 sensor inputs, printer, and SCALD
T750P/3	Three tank kit with 8 sensor inputs, and printer
T750P/3S	Three tank kit with 8 sensor inputs, printer, and SCALD
T750P/4	Four tank kit with 8 sensor inputs, and printer
T750P/4S	Four tank kit with 8 sensor inputs, printer, and SCALD

TS-750 220 VAC Models

Model	Description
V750P/1C	Single tank kit with 8 sensor inputs and printer
V750P/1SC	Single tank kit with 8 sensor inputs, printer, and SCALD
V750P/2C	Two tank kit with 8 sensor inputs, and printer
V750P/2SC	Two tank kit with 8 sensor inputs, printer, and SCALD
V750P/3C	Three tank kit with 8 sensor inputs, and printer
V750P/3SC	Three tank kit with 8 sensor inputs, printer, and SCALD
V750P/4C	Four tank kit with 8 sensor inputs, and printer
V750P/4SC	Four tank kit with 8 sensor inputs, printer, and SCALD

Note: The TS-750 kit prices include 4" floats and install kits. 2" floats and install kits are available for an additional cost. Contact FFS Customer Service for pricing.

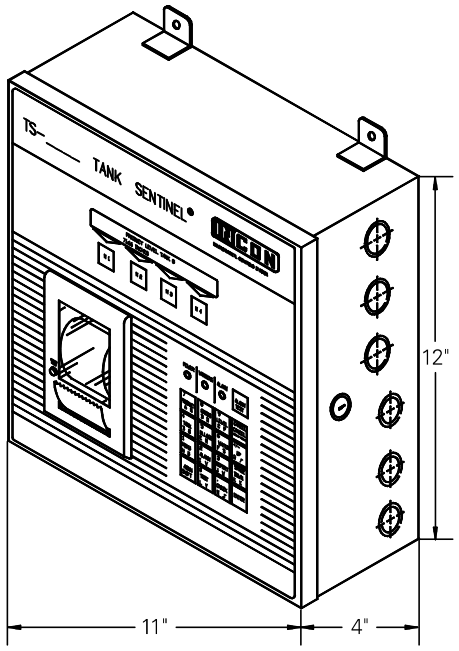

TS-750

Internal Console Hardware Enhancements

Part Number	Description
TSSP-FDM2	(M) Internal modem, see software enhancements

Console Software Enhancements

Part Number	Description
TS-SCALD*	(S) Statistical Continuous Automatic Leak Detection, 24 hour continuous tank testing software
TS-DOM2**	(D) Data only modem software
TS-FM2**	(F) Fax and data modem software
TS-LLDI***	(L) Line leak detector interface software
TS-Reconciliation****	(R) Dispenser reconciliation software

*SCALD is not available with inventory control consoles or back-up generator consoles (the S in the console part number identifies this option). SCALD is used in 24-hour locations for tank leak testing.

**TSSP-FDM2 internal modem hardware is required (the M before the forward slash in the console part number identifies this option). Choose data-only modem software to support System Sentinel™ software, or choose fax and data modem software when faxed reports are required.

***Electronic line leak detector hardware is required (the L in the console part number identifies this option). This interface software enables line leak detector compliance reporting and line leak test scheduling capability. Not available on the TS-750 console.

****TS-DIM dispenser interface module hardware is required (the R in the console part number identifies this option). This option provides automated inventory reconciliation. Not available on the TS-750 console.

Upgrading Installed Tank Sentinel® Consoles

Upgrade	Description
Internal modem	TSSP-FDM2 internal modem hardware TS-DOM2 data only modem software or TS-FM2 fax and data software
24 hour leak detection	TS-SCALD statistical, continuous automatic leak detection software
Line leak	Appropriate TS-LS300 or TS-LLD TS-LLDI line leak detector interface software
Automated inventory reconciliation	Appropriate TS-DIM dispenser interface module TS-Reconciliation dispenser reconciliation software

Note: When placing order to upgrade installed consoles, the serial number of the console to be upgraded must be supplied.

Paper Supplies

Part Number	Description
TS-TP2	One box of 5 rolls of thermal printer paper for fuel management system and Tank Sentinel® consoles
TS-TP2C	One case of 20 boxes of 5 rolls of thermal printer paper for fuel management system and Tank Sentinel® consoles

S940 SENSOR ALARM CONSOLE

The S940 Sensor Alarm Console is a cost effective solution for tank overfill protection and sensor leak detection needs. This easy-to-install-and-operate device monitors up to four tanks, containment sumps or interstitial spaces and provides an audible and visual indication of an alarm condition. Two programmable relay outputs are included to sound an external alarm or send a signal to a building control or monitoring system. The weather proof enclosure allows the S940 Sensor Alarm Console to be conveniently installed indoors or out.

Highlights

- Monitors up to 4 sensors for overfill or leak detection.
- Simple to install and configure.
- Can be installed indoors or outdoors.
- Cost effective leak detection or overfill solution.
- Connect to remote alarms or external devices.

Model	Description
S940	Four channel sensor alarm console

Specifications

- Input channels: 4 (2-wire float switch sensor inputs)
- Output channels: 2 (dry contact relay outputs)
- Internal audible alarm
- Alarm, power and output LEDs
- Compatible Franklin Fueling Systems 2-wire sensors
  - TSP-ULS universal liquid sensor
  - TSP-HLS high level sensor
  - TSP-HFS horizontal float switch
  - TSP-UHS universal hydrostatic sensor
- Dimensions: 6" x 6" x 4"
- Power requirements: 100-240 VAC +/- 10%, 50/60 Hz, 15 W max
- Operating temperature: -13° to +140 °F (-25° to +60 °C)
- Enclosure: NEMA® 4, indoor / outdoor (non-hazardous locations only)

Capabilities

- Tank overfill alarm
- Steel or fiberglass tank interstitial monitoring
- Containment sump monitoring
- General liquid sensor monitoring
- Programmable relay outputs for remote alarm or external device interface

Approvals

- UL, cUL, associated apparatus, non hazardous location
- Third party certification of leak detection capabilities

TS-LS300 AUTOLEARN™

The TS-LS300 AutoLearn™ line leak detection system learns the exact characteristics of each line, ensuring unparalleled accuracy. It can run independently or with any INCON TS-1001, TS-2001, TS-504 or TS-508 tank gauge.

Highlights

- Automatically learns exact pipeline characteristics.
- No pipe type and length programming required.
- Monitors flexible, steel and/or fiberglass pipelines in any combination up to certified maximum values.
- Works with submersible pumps generating 25 psi or more.
- Automatically performs 3.0 gph, 0.2 gph, and 0.1 gph line tests.
- Positive submersible pump shutdown in the event of a leak.
- Can be monitored through ATG and System Sentinel™.
- Third party certified for 0% probability of false alarm.
- Eliminates the need for factory calibration or on-site field judgments for set-up.
- For use in rigid, flex, and rigid/flex piping configuration.
- Immediate notification of alarm condition.
- Allows printed compliance reports.

Capabilities

- The TS-LS300 performs a 3.0 gph leak and pressure test after every dispense. Upon detection of a failed test, the LS300 will alarm and positively shutdown the affected turbine.
- The TS-LS300 continuously monitors pressurized lines for thermally stable conditions and performs a 0.2 gph monthly and 0.1 gph annual precision leak test during the thermally stable union.
- AutoLearn™ line leak detection technology is also available with the TS-LS500, part of the T5 Series fuel management systems.

Approvals

- UL, cUL, ATEX
- Third party certification of leak detection capabilities

Console Specifications

- Number of lines monitored: 1, 2, 3 or 4.
- Dimensions: 11" × 12" × 4".
- Power requirements:
  115 VAC - +15%, -10%, 100 Watts maximum, 1 Amp maximum.
  230 VAC - +15%, -10%, 100 Watts maximum, 0.5 Amp maximum.
- Operating temperature: 20 ° to 122 °F (10 ° to 50 °C).

Leak Sensing Transducer Specifications

- Number of lines monitored: 1.
- Dimensions: 6-1/4" × 2" NPT.
- Applicable liquids: Motor fuels.
- Power requirements: 10 to 20 VDC from console.
- Operating temperature: -40° to 149 °F (-40° to 66 °C).
- Operating pressure: 0 to 100 psi (0 to 689 kPa).
- Belden™ cable: #9363-22 AWG, #9364-20 AWG or #9365-18 AWG.
- Max. sensor to console cable distance: 500' (152.4 M).
- Sensor port fitting: 2" female NPT.
- Sensor material: anodized aluminum body and stainless steel sensor.
- Intrinsic safety rating: Class 1, Div. 1, Group D, II (1) G [EEX Ia] IIA T4
- Explosion-proof: Class 1, Div. 1, Group D.

TS-LS300, 115 VAC 50/60 Hz Models

Intrinsically Safe
For new installations where separate low voltage conduits can be used.

Model	Description
TS-LS300/2	2-line console with line calibration kit
TS-LS300/3	3-line console with line calibration kit
TS-LS300/4	4-line console with line calibration kit

Note: All AutoLearn™ models include the TPI turbine pump interface module.

Explosion Proof
For retrofit installations where only a high voltage conduit can be used.

Model	Description
TS-LS300E/2	2-line console with line calibration kit
TS-LS300E/3	3-line console with line calibration kit
TS-LS300E/4	4-line console with line calibration kit

Note: All AutoLearn™ models include the TPI turbine pump interface module.

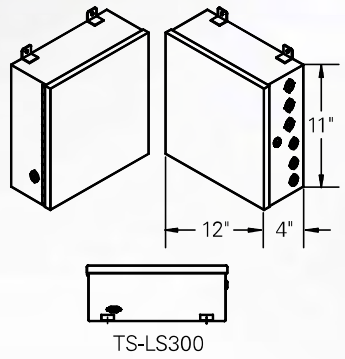

TS-LS300

TS-LS300, 230 VAC 50/60 Hz Models

Intrinsically Safe
For new installations where separate low voltage conduits can be used.

Model	Description
VS-LS300/2	2-line console with line calibration kit
VS-LS300/3	3-line console with line calibration kit
VS-LS300/4	4-line console with line calibration kit

Note: All AutoLearn™ models include the TPI turbine pump interface module.

Interface Cable

For connecting two AutoLearn™ consoles together.

Model	Description
TSSP-ALICBL	AutoLearn™ interface cable

Alternative Fuels Accessories

Model	Description
TS-AFALNIP	Leak generator needle valve kit required for E85 installations

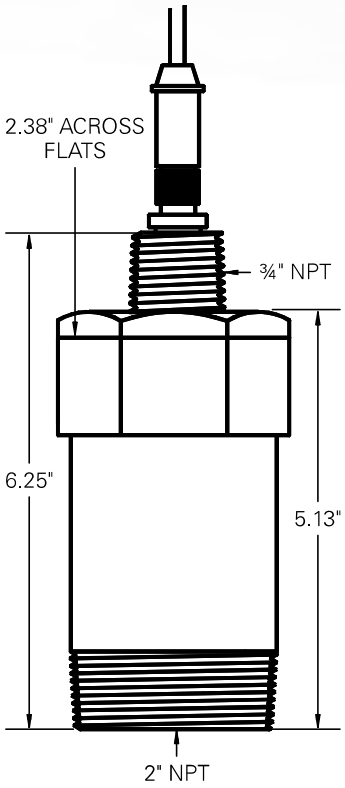

TS-LSU300 TRANSDUCER

LINE SENTINEL™

The INCON TS-LLD line leak detector uses patented, flow-based technology to perform multiple line tightness tests.

Specifications

- Dimensions:
  Console - 4-3/8" × 3-3/8" × 2-5/16".
  Line leak detector - 23-1/2" × 2-3/8".
- Applicable liquids: Gasoline and diesel motor fuels.
- Gross leak test (3.0 gph): Yes.
- Monthly test (0.2 gph): Yes.
- Annual test (0.1 gph): Yes.
- Indicates days since 0.2 gph test passed: Yes.
- LED unit: Yes.
- Positive shut-down: Yes.
- Tank Sentinel® interface: Yes.

Applications

The TS-LLD can be used in most pressurized applications, in any new or existing turbine pump housing and can be used in place of a mechanical leak detector.

- Third party certified with 100% probability of leak detection and a 0% probability of false alarm.
- Supports rigid, fiberglass, and flexible piping systems.
- Line leak test failure indicated by alarm.
- Works as a stand-alone unit or interfaced with INCON Tank Sentinel® consoles.

Note: The presence of the integral in-line check valve of the TS-LLD during normal operation creates a pressure drop which will reduce the total flow potential of the submersible pump. Some of the pressure drop can be compensated by upgrading the submersible pump motor. To ensure desirable flow rates are achieved, we do not recommend TS-LLD in the following sites:

- where it is imperative to achieve 10 gpm.
- sites that frequently have more than 4 nozzles open at a time.In such cases we recommend our AutoLearn™ pressure-based electronic leak line detector.

Highlights

- The TS-LLD leak detector performs gross leak tests after each 3.0 gph dispense, the monthly 0.2 gph test and the annual 0.1 gph test.
- Performs positive shutdown if a leak is detected.
- Tests performed at full pump pressure to ensure integrity of lines.
- Carries numerous regulatory approvals.
- Low-cost, wireless installation retrofits easily into the existing submersible turbine pump housings without excavation.

Capabilities

The INCON TS-LLD line leak detector performs a variety of tests for environmental compliance.

- Eliminates slow-flow problems associated with mechanical leak detectors.
- Immediately identifies leaks even in changing thermal conditions, unlike mechanical LLDs.
- Performs continuous testing using highly sensitive volumetric flow technology.
- Continuously performs self-diagnostic test to ensure proper system operation.

Approvals

- UL, cUL
- Third party certification of leak detection capabilities

Model	Description
TS-LLD/FE	Electronic line leak detector with an FE Petro installation adapter, one required for each submersible pump
TS-LLD/RJ	Electronic line leak detector with a Red Jacket™ installation adapter, one required for each submersible pump
TS-LLD/RJQ	Electronic line leak detector with a Red Jacket™ Quantum™ installation adapter, one required for each submersible pump

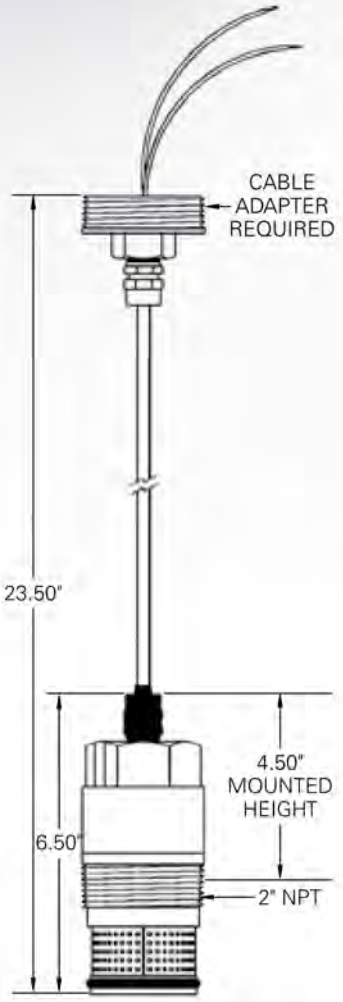

TS-LLD

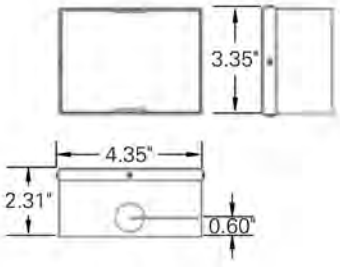

TS-LLD CONTROL UNIT

Veeder-Root™ is a trademark of Danaher Corporation.
Quantum™ is a trademark of Gilbarco Inc.
Red Jacket™ is a trademark of Veeder-Root Company.

LEAK DETECTION AND INVENTORY CONTROL PROBES

TSP-LL2 liquid level probes are advanced instruments that use magnetostrictive position measurement technology to accurately report inventory levels in storage tanks.

Highlights

- Easy to use and install.
- Uses innovative, magnetostrictive position measurement technology to report liquid levels.
- Highly stable performance.
- Unparalleled accuracy and performance when used with a Franklin Fueling Systems Automatic Tank Gauge.
- Screw-in electrical connector provides quick installation or removal eliminating the need to resplice wires.
- Intrinsically safe circuits for hazardous locations.

Specifications

- Operating temperature: -40° to 140 °F (-40° to 60 °C).
- Storage temperature: -40° to 158 °F (-40° to 70 °C).
- Non-linearity: ±0.025% of full scale.
- Repeatability: ±0.001".
- Temperature sensors: 5 thermistors located in the shaft.
- Temperature resolution: ±0.02 °F (±0.01 °C).
- Probe pigtail: 10' long two conductor cables with shields and polyurethane jacket.
- Interface cable:
  0' to 200' - Belden™ 87760.
  0' to 400' - Belden™ 87761.
  0' to 1500' - Belden™ 89182.
  Consult factory for others.
- Shaft, E-ring, and washer materials:
  # 316 stainless steel. Housing - anodized aluminum, MIL-A-8625C, Type 2, Class 2.
  Floats - nitrophyl, PVDF, and nickel-plated brass.
- Float kits must be ordered separately.

Applications

The LL2 Series of liquid level probes feature exceptional linearity, resolution, and stability, and are used in underground and aboveground storage tanks. Two types of probes are manufactured for use with Franklin Fueling Systems Automatic Tank Gauges.

- The TSP-LL2 probe is typically used for underground storage tanks and petroleum applications when static or SCALD leak detection is required.

Theory of Operation

- An electromagnetic field is created inside the probe head and forms around a long waveguide within the probe shaft when position measurements are taken.
- The electromagnetic field interacts with the magnetic field of the float(s) and produces a shock wave in the waveguide that travels at a known speed.
- When the shock wave is detected at the probe head, the probe creates a signal that corresponds precisely to the product level.
- Product expansion calculations are enabled by temperature sensors that are located at various points in the probe shaft.
- The TSP-LL2-I probe is typically used for aboveground storage tanks, chemical or oil waste, or underground storage tanks that do not require in-tank leak detection.
- Probes are available in many sizes that are suitable for all common tanks.
- Easily installed into 2", 3" or 4" riser pipes.

Capabilities

- Probes can report the level of up to 3 floats.
- The TSP-LL2 is capable of precise leak detection, density measurement and inventory monitoring.
- The TSP-LL2-I is capable of inventory monitoring.
- Use the appropriate FFS suspension type installation kit to install all TSP-LL2 leak detection probes.
- Use the appropriate FFS bottom mount type installation kit for installing all TSP-LL2-I Inventory Control probes. These probes come with special hardware for installation on the tank bottom.
- Float kits must be ordered separately.

Approvals

- UL, cUL, ATEX, IECEx

Belden™ is a trademark of Belden Technologies, Inc.

Leak Detection

Model	Description
TSP-LL2-29	2' diameter tank probe
TSP-LL2-41	3' diameter tank probe
TSP-LL2-53	4' diameter tank probe
TSP-LL2-65	5' diameter tank probe
TSP-LL2-69	5'4" diameter tank probe
TSP-LL2-77	6' diameter tank probe
TSP-LL2-81	6'4" diameter tank probe
TSP-LL2-89	7' diameter tank probe
TSP-LL2-101	8' diameter tank probe
TSP-LL2-113	9' diameter tank probe
TSP-LL2-125	10' diameter tank probe
TSP-LL2-131	10'6" diameter tank probe
TSP-LL2-137	11' diameter tank probe
TSP-LL2-149	12' diameter tank probe

Notes:
1. Custom probe lengths are available; contact factory for price and delivery.
2. These probes are used with all Franklin Fueling Systems ATG consoles.
3. Float kits must be ordered separately.

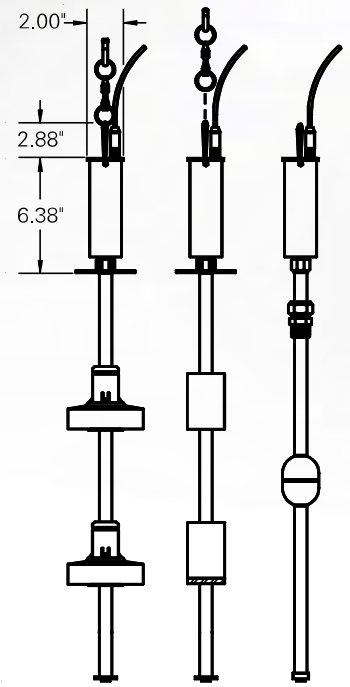

Inventory Control

Model	Description
TSP-LL2-29-I	2' diameter tank probe
TSP-LL2-41-I	3' diameter tank probe
TSP-LL2-53-I	4' diameter tank probe
TSP-LL2-65-I	5' diameter tank probe
TSP-LL2-69-I	5'4" diameter tank probe
TSP-LL2-77-I	6' diameter tank probe
TSP-LL2-81-I	6'4" diameter tank probe
TSP-LL2-89-I	7' diameter tank probe
TSP-LL2-101-I	8' diameter tank probe
TSP-LL2-113-I	9' diameter tank probe
TSP-LL2-125-I	10' diameter tank probe
TSP-LL2-131-I	10'6" diameter tank probe
TSP-LL2-137-I	11' diameter tank probe
TSP-LL2-149-I	12' diameter tank probe
TSP-LL2-161-I	13' diameter tank probe
TSP-LL2-173-I	14' diameter tank probe
TSP-LL2-185-I	15' diameter tank probe
TSP-LL2-197-I	16' diameter tank probe
TSP-LL2-209-I	17' diameter tank probe
TSP-LL2-221-I	18' diameter tank probe

Notes:
1. Orders for probes larger than 149" cannot be canceled and are non-returnable.
2. Probes larger than 149" may require special floats and install kits. Contact FFS for more info.
3. These probes are used with all Franklin Fueling Systems ATG consoles.
4. Not for leak detection.
5. Float kits must be ordered separately.
6. Comes with bottom mount hardware. For replacement hardware kits, order TSSP-BMKT

MOORMAN LEVEL GAUGE KIT

The Moorman level gauge kit includes the complete Moorman gauge (7S for 35' tanks and 9S for 50' tanks) and the appropriate length magnetostrictive inventory probe. The Moorman level gauge retrofit kit includes the appropriate length magnetostrictive inventory probe and probe mounting accessories. TSP-UVPK ultraviolet protection kit is included.

Highlights

- Can be used in any tank up to 50' high.
- Suitable for all petroleum and many industrial applications.
- Available as a complete system or retrofit.

Model	Description
TSP-MLGK-35	Standard gauge kit for vertical tanks up to 35'
TSP-MLGK-35-M	Standard gauge for vertical tanks up to 35' with metric display
TSP-MLGKSS-35	Standard gauge for tanks up to 35' with stainless steel tape and float
TSP-MLGKSS-35-M	Standard gauge for tanks up to 35' with metric display, with stainless steel tape and float
TSP-MLGK-50	Standard gauge for vertical tanks up to 50'
TSP-MLGKSS-50	Standard gauge for tanks up to 50' with stainless steel tape and float
TSP-MRFK-35	Retrofit gauge kit for vertical tanks up to 35'
TSP-MRFK-50	Retrofit gauge kit for vertical tanks up to 50'

FLOAT KITS

2" and 4" Floats

Chemical Floats

LPG Floats

Highlights (2" & 4" Floats)

- Designed for applications involving 2", 3" or 4" riser pipes.
- Each float set contains a product and water float.
- Compatible with a wide variety of petroleum products.
- Water floats are colored red for gasoline and blue for diesel assure compatibility with most liquids.

Highlights (Chemical Floats)

- Suitable for use in a wide variety of chemical applications; consult factory for chemical compatibility issues.
- Use one float per TSP-LL2-I probe.
- Float specific gravity 0.55 to 0.63.
- Collapse pressure 500 psi/g minimum.

Highlights (LPG Floats)

- Designed for applications involving tank openings of at least 2".
- Single float used for monitoring the level of LPG (propane) fuel.
- Suitable for monitoring pressurized products.
- For use in USTs or ASTs with TSP-LL2 or TSP-LL2-I probes. TSP-LPG/EU float can be used with locally supplied tank isolation sleeves.

Model	Description
TSP-IDF2	2" float set for diesel tanks
TSP-IGF2	2" float set for gasoline tanks
TSP-IDF4	4" float set for diesel tanks
TSP-IGF4	4" float set for gasoline tanks
TSP-LPGF	2" float for LPG tanks, with or without isolation sleeve
TSP-SSP	2-1/16" OD, #316 stainless steel float for chemical applications only

Note: Order one float set for each LL2 Mag probe.

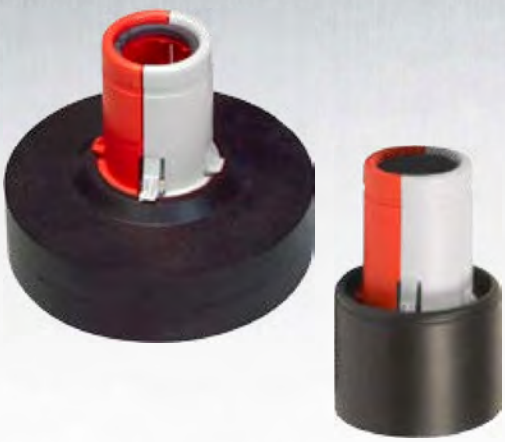

PHASE SEPARATION FLOAT KITS

INCON™ brand 2" and 4" phase separation float kits detect both water and phase separation with a single float kit. The water and phase separation detection float kit allows you to effectively manage product levels as well as alert you of water or phase separation levels in your tanks. A single float is used to detect the presence of both water or phase separated fuel to ensure the prevention of either from reaching customer's vehicles.

Highlights

- Optional float kit for gasoline and Ethanol blend users.
- Product float determines fuel level.
- Water float will rise with the presence of water or phase separated fuel.
- Simple single-float solution for both water and phase separation.
- Free software upgrade available for T5 Series fuel management systems and Colibri automatic tank gauges.
- Improved minimum water level detection capability.
- Allows you to easily shut down a submersible pump before water or phase separation reaches the customer's vehicle.

Specifications

- Designed for applications using 2" or 4" risers.
- Each float kit contains both product float and water and phase separation float.
- Appropriate for use with gasoline and Ethanol blends up to E15.
- Compatible with all TSP-LL2 and TSP-LL2-I probes.
- T5 Series and Colibri software version 1.8.0 required.

Ordering Information

Model	Description
TSP-IGF2P	2" phase separation float kit for gasoline and up to E15
TSP-IGF4P	4" phase separation float kit for gasoline and up to E15

DENSITY MEASUREMENT FLOAT KITS

With INCON™ brand density float kits, tank gauges like the Colibri and T5 Series fuel management systems have the ability to continuously monitor the density of fuel stored in underground and aboveground storage tanks. The same TSP-LL2 magnetostrictive probe that provides inventory management and leak detection capabilities can also supply product density and mass without the addition of extra probes or sensors. Programmable high and low density alarm points allow the user to determine the range of acceptable density fluctuations.

Highlights

- Designed for applications involving 4" riser pipes.
- Each float set contains a product, density, and water float.
- Available in Standard (3 kg/m3 accuracy) or Precision (1 kg/m3 accuracy) models.
- Floats are constructed of Nitrile rubber and PVDF (precision model density floats are also nickel-plated).
- Water and product floats are colored red for gasoline and blue for diesel.
- Density and product floats are calibrated and must be maintained as a set.
- Theory of Operation: Density measurement is based on the distance between the calibrated product and density floats. As the density of the fuel changes, the gap between the floats will increase or decrease in proportion to the change. The tank gauge receives this information from the probe and uses it to calculate and display the current density of the fuel.

Ordering Information

Model	Description	Density Range
TSP-IDF4D3	Standard diesel/fuel oil density float kit	790-900 kg/m3
TSP-IGF4G3	Standard gasoline density float kit	690-800 kg/m3
TSP-IDF4D	Precision diesel/fuel oil density float kit	790-900 kg/m3
TSP-IGF4G	Precision gasoline density float kit	690-800 kg/m3

Note: Order one density measurement float kit for each magnetostrictive probe. Probes used with density float kits must have serial numbers greater than 6000000.

Specifications

- Measurement accuracy: ±1.0 kg/m3
- Measurement resolution: ±0.1 kg/m3
- Minimum detectable product level with water float: 10.70"
- Minimum detectable product level without water float: 6.70"

System Diagram

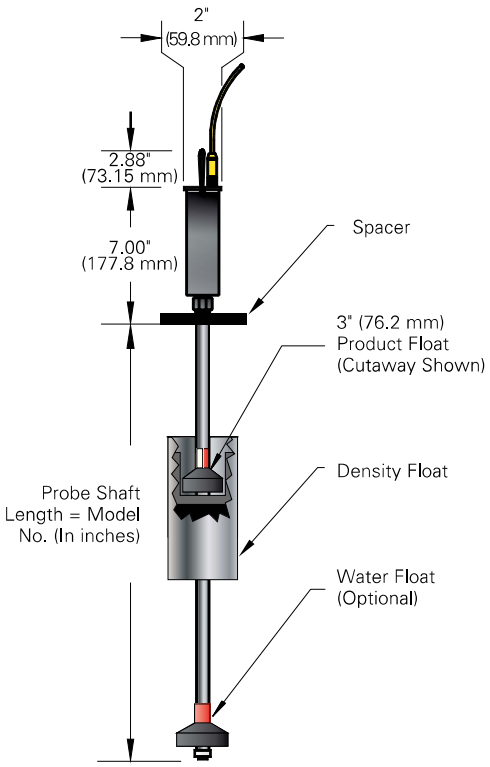

PROBE INSTALLATION KITS

FFS Probe installation kits primarily come in two styles, Suspension and Bottom Mount. The Suspension kits are used to install TSP-LL2-xxx Leak Detection probes in underground storage tank applications using either 2" or 4" riser pipes. Suspension isolates the probe from possible tank deflection and also keeps in it a true vertical orientation for optimal float movement and measurement accuracy. These kits also provide a tight seal to the tank to prevent water intrusion and meet regulatory requirements. The 4" models also provide a quick release cap for easy access to the probe for inspection or maintenance. TSP-LL2-xxx-I Inventory Control probes come with hardware that allows them to be installed on the tank bottom. The Bottom Mount install kits provide the same tight seal and ease of access without the need for the suspension hardware necessary in leak detection applications. Both styles work well on either steel or fiberglass tanks.

Highlights

- The TSP-K4AS/ASL install kits are for use with chemical or other installations where it is desireable for the probe head to be outside of the riser. It consists of a #316 SS 4" cap and compression fitting that is installed on the probe shaft so that only the floats and shaft are exposed to the tank contents. Includes TSP-UVPK probe head protection kit.
- The TSP-LPGK install kit is for use with pressurized LPG tanks where the probe head will reside outside of the tank opening. It consists of a special compression fitting, designed to retain the contents of the pressurized tank, that is installed on the probe shaft and then inserted into a user supplied cap with a 3/4" NPT hole. Includes TSP-UVPK probe head protection kit.

Suspension Kits

Part Number	Description
TSP-K2A	Leak detection probe install kit for 2" riser pipes
TSP-K2B	Leak detection probe install kit for 2" riser pipes with BSP threads
TSP-K4A	Leak detection probe install kit for 4" riser pipes
TSP-K4B	Leak detection probe install kit for 4" riser pipes with BSP threads

Bottom Mount Kits

Part Number	Description
TSP-C2A	Inventory probe install kit for 2" risers
TSP-C2B	Inventory probe install kit for 2" risers with BSP threads
TSP-C4A	Inventory probe install kit for 4" risers
TSP-C4B	Inventory probe install kit for 4" risers with BSP thread

Other Kits

Part Number	Description
TSP-K4AS	#316 stainless steel mag probe install kit for 4" riser pipes
TSP-K4ASL	#316 stainless steel install kit for probes larger than 149"
TSP-LPGK	LPG probe install kit, 149" maximum LL2 probe length

Cables

Part Number	Description
600-0042	Belden™ #87761, runs up to 500'
600-0055	Belden™ #89182, runs 500' to 1,500'
600-0080	Quick disconnect probe cable

Notes:
1. Cable is sold in 500' increments.
2. Orders greater than 500' will ship in 1000' and 500' rolls.
3. Contact tech support for more information on cable requirements.

Accessories

Part Number	Description
TSP-DB1	One direct burial splice connector kit
TSP-DB10	Pack of 10 direct burial splice connector kits
TSP-DBTOOL	Epoxy dispensing tool
TSP-KW30	Pack of 30 3M™ splice connectors
TSP-UVPK	Ultraviolet protection kit - protects probe electronics when installed in AST applications

Notes:
1. Use the TSP-DB1 or TSP-DB10 for direct burial cable applications or when weatherproof junction boxes are not used.
2. The DBTOOL is required to dispense the epoxy.
3. Each direct burial splice connector kit includes a receptacle, three splice connectors, and epoxy for the dispensing tool.

Belden™ is a trademark of Belden Technologies, Inc.
3M™ is a trademark of 3M Company.

TSP-HIS HYDROSTATIC INTERSTITIAL BRITE™ SENSOR

The TSP-HIS hydrostatic interstitial Brite™ sensor detects leaks in double wall tanks where the interstitial space is filled with a liquid brine solution. For use with all Tank Sentinel® and fuel management systems, the TSP-HIS polyester, Nitrile, and epoxy construction is compatible with all types of brine.

Highlights

- Versatile sensor for virtually all fiberglass double wall tanks equipped for hydrostatic leak detection.
- Microcomputer monitors liquid at varying levels within tanks and relays digitally encoded status information via the fail-safe Brite™ sensor digital communication system to fuel management system or Tank Sentinel® consoles, alerting of any alarm conditions.

Model	Description
TSP-HIS	Hydrostatic interstitial Brite™ sensor, 11"*
TSP-HIS-XL	Hydrostatic interstitial Brite™ sensor, 21"*
TSP-KV4	Hydrostatic sensor vented riser pipe cap kit for 4" riser pipes

Note: This sensor communicates with the console using 3 wires.
*Not including cable.

Application

For liquid-filled tank interstitial monitoring.

Installation

- Lower TSP-HIS to the bottom of the brine reservoir of double wall tank.
- The normal brine level should reside half way up the sensor.
- Sensors include the TSP-KV4 vented 4" riser cap.

TSP-DIS DISCRIMINATING INTERSTITIAL BRITE™ SENSOR

The TSP-DIS discriminating interstitial Brite™ sensor detects the presence of various liquids in tanks as well as sumps and other locations. The TSP-DIS is designed to interface with the Tank Sentinel® and fuel management system.

Highlights

- Installs in the interstitial space of steel and fiberglass double wall tanks and sumps.
- Uses light beam traveling through probe to determine if sensor is wet.
- Microprocessor inside sensor interprets readings and communicates data to the Tank Sentinel® and fuel management system.
- Fail-safe digital communications with built-in alarm if sensor malfunctions.
- Sensor can distinguish between petroleum and water.
- Alarms indicate petroleum present, water present, and sensor malfunction.

Model	Description
TSP-DIS	Discriminating interstitial Brite™ sensor
TSP-KI2	Interstitial sensor riser cap kit for 2" riser pipes

Note: This sensor communicates with the console using 3 wires.

Application

For dry tank interstitial monitoring.

Installation

Each TSP-DIS comes with 25' of oil-resistant cable. For fiberglass tanks, TSP-DIS is pulled into the interstitial space using a "fish" string or wire. For steel interstitial tanks, TSP-DIS is lowered directly to the bottom of the interstitial space through a 2" NPT fitting provided for that purpose on the tank. Optional installation kits are available which include a riser cap and other parts required to complete installation.

TSP-EIS ELECTRO-OPTIC INTERSTITIAL SENSOR

The TSP-EIS electro-optic interstitial sensor may be used with all Tank Sentinel® and fuel management system consoles. Utilizing electro-optic technology and made of chemically resistant polysulfone plastic, the TSP-EIS may be installed in sumps, double wall tanks or other locations where the presence of liquid indicates a leak has occurred.

Highlights

- Highly accurate electro-optic technology and closed output circuit ensures that leaks are detected.
- Chemical-resistant materials.
- Can be installed in fiberglass or steel double wall tanks.
- Utilizes light emitting diodes and prisms to indicate if a leak has occurred.

Model	Description
TSP-EIS	Electro-optic interstitial sensor
TSP-K12	Interstitial sensor riser cap kit for 2" riser pipes

Note: This sensor communicates with the console using 3 wires.

Application

For dry tank interstitial monitoring.

Installation

Each TSP-EIS comes with 25' of oil-resistant cable. For fiberglass tanks, TSP-EIS is pulled into the interstitial space using a "fish" string or wire. For steel interstitial tanks, TSP-EIS is lowered directly to the bottom of the interstitial space through a 2" NPT fitting provided for that purpose on the tank. Optional installation kits are available which include a riser cap and other parts required to complete installation.

TSP-HFS HORIZONTAL FLOAT SWITCH SENSOR

The TSP-HFS horizontal float switch sensor is a 2-wire non-discriminating liquid sensor which may be used with the S940 alarm console. The TSP-HFS is designed primarily for liquid detection in fiberglass tank dry interstitial spaces.

Highlights

- Fiberglass interstitial monitoring using a 2-wire sensor.
- Highly reliable magnetic-float/reed-switch technology.
- Chemical-resistant materials.

Model	Description
TSP-HFS	Horizontal float switch sensor
TSP-KI2	Interstitial sensor cap kit for 2" riser pipes

Application

For dry fiberglass tank interstitial monitoring.

Installation

Each TSP-HFS comes with 25 feet of oil-resistant cable. For fiberglass tanks, the TSP-HFS sensor is pulled into the interstitial space using a "fish" string wire. Optional installation kits are available which include a riser cap and other parts required to complete the installation.

TSP-ULS LIQUID SENSOR

The TSP-ULS liquid sensor is a low cost sensor which may be used with all Tank Sentinel® and fuel management system consoles. This sensor is also compatible with S940 Sensor Alarm Console. Based on float-switch technology and made of chemically resistant materials, the TSP-ULS may be installed in sumps, dispenser pans, steel double wall tanks or other locations where the presence of liquid indicates a leak has occurred.

Highlights

- Highly reliable float technology and closed output circuit ensures that leaks are detected.
- Chemical-resistant materials assure compatibility with most liquids.

Model	Description
TSP-ULS	Universal liquid sump sensor
TSP-K12	Interstitial sensor riser cap kit for 2" riser pipes

Note: This sensor communicates with the console using 3 wires.

Application

For dry steel tank interstitial and containment sump monitoring.

Installation

Each TSP-ULS comes with a 25' cable. 1/2" NPT thread is provided on the compression gland fitting attached to the sensor's cable, allowing it to be suspended from standard electrical boxes and fittings. The sensor may be positioned vertically by adjusting cable length. For steel interstitial tanks, TSP-ULS is lowered into the opening provided on the tank and is suspended by optional TSP-KI2 installation kit. Other mounting methods available depending upon application and location.

TSP-UHS UNIVERSAL HYDROSTATIC SENSOR

The TSP-UHS Universal Hydrostatic Sensor uses float switch technology to continuously monitor liquid filled double wall containment sumps. Normally submerged, the single float TSP-UHS will provide an indication if there is a loss of monitoring liquid.

Highlights

- Highly reliable float technology and closed output circuit ensures that leaks are detected.
- Chemical-resistant materials.

Model	Description
TSP-UHS	Universal Hydrostatic Sensor
HM-KIT	Hydrostatic monitoring installation kit. Includes: flexible brine tube, sensor housing clamp, sensor housing, sensor cap and hardware

Note: This sensor communicates with the console using 2 wires.

Application

Typically used for hydrostatic monitoring of the liquid in a double wall sump interstice.

Installation

Each TSP-UHS comes with a 25' cable. The sensor can be installed into the reservoir of a liquid filled double wall containment sump. The sensor must be installed in a vertical position at a level where it is normally submerged. The TSP-UHS will alert if the liquid level drops below the bottom of the sensor.

TSP-DMS DISCRIMINATING MAGNETOSTRICTIVE SENSOR

The TSP-DMS is a fast acting discriminating sensor that utilizes magnetostrictive technology to provide reliable monitoring of dispenser pans and containment sumps. Its floats can detect the presence of water or hydrocarbons and also ensure that the sensor installation has not been tampered with. The TSP-DMS can report water warnings and programmable water alarm points as well as product alarms. The TSP-DMS is used with fuel management system consoles.

Highlights

- Utilizes proven magnetostrictive technology.
- Water warning, water alarm, and product alarm.
- Tamper protection feature will alarm if sensor is moved from installed position.
- Will alarm and recover quickly when hydrocarbons are present.

Application

For containment sump monitoring.

Model	Description
TSP-DMS-12	Discriminating magnetostrictive sensor, 12"
TSP-DMS-24	Discriminating magnetostrictive sensor, 24"
TSP-KS	Unistrut™ mounting kit

Notes:
1. For use with the T5 Series fuel management systems.
2. This sensor communicates with the console via the TS-PRB probe module.
3. Requires Controller Module software version 9.5 or greater.

Unistrut™ is a trademark of Unistrut Corporation.

TSP-DDS DISCRIMINATING DISPENSER SUMPBRITE™ SENSOR

The TSP-DDS is a discriminating dispenser sump Brite™ sensor which provides reliable monitoring of dispenser pans and containment sumps. Combining magnetic float switch sensors with an innovative polymer strip, the TSP-DDS generates three different alarms for the detection of hydrocarbons, for liquid in sump, and when the sump is full. The TSP-DDS may be used with both fuel management system and Tank Sentinel® consoles.

Highlights

- Uses magnetic float switches to detect liquid at two levels.
- Innovative polymer strip detects hydrocarbons along sensor and floating on water.
- Compatible with common fuels and chemicals.
- Detects liquid at 1-1/2" from base.
- Detects hydrocarbons on sensor and floating on water.
- Digitally encoded status information sent from microcomputer to console from 775+ feet.
- Alarms to indicate liquid in sump, hydrocarbon detected, sump is full and sensor malfunction.

Application

For containment sump monitoring.

Installation

Variety of mounting methods possible depending on location. Bracket provided for quick installation.

Model	Description
TSP-DDS	Discriminating dispenser sump Brite™ sensor
TSP-KS	Unistrut™ mounting kit

Note: This sensor communicates with the console using 3 wires.

TSP-DTS DISCRIMINATING TURBINE SUMP BRITE™ SENSOR

The TSP-DTS is a discriminating turbine sump Brite™ sensor that detects the presence of liquid and hydrocarbons when installed in turbine and containment sumps. TSP-DTS is designed to interface with Tank Sentinel® and fuel management system.

Highlights

- Uses magnetic float switches to detect liquid at two levels.
- Innovative polymer strip detects hydrocarbons along sensor and floating on water.
- Compatible with common fuels and chemicals.
- Detects liquid at 1-1/2" from base.
- Detects hydrocarbons on sensor and floating on water.
- Digitally encoded status information sent from microcomputer to console from 775+ feet.
- Alarms to indicate liquid in sump, hydrocarbon detected, full sump, and sensor malfunction.

Application

For containment sump monitoring.

Model	Description
TSP-DTS	Discriminating turbine sump Brite™ sensor
TSP-KS	Unistrut™ mounting kit

Unistrut™ is a trademark of Unistrut Corporation.

TSP-DVS DISCRIMINATING VAPOR BRITE™ SENSOR

The TSP-DVS is a discriminating vapor Brite™ sensor that detects the presence of gas or vapor molecules when installed in dry monitoring wells or containment space where vapor detection is necessary. TSP-DVS is designed to interface with the Tank Sentinel® and fuel management system.

Highlights

- Detects vapor, gas, and rising groundwater when installed in a monitoring well.
- Fail-safe digital communication with built-in alarm if sensor malfunctions.
- Senses ambient temperature to minimize false alarms.
- Equipped with twenty feet of oil-resistant cable for installation in 2" and 4" monitoring wells located around underground tanks.
- Senses vapor, gas, and groundwater.
- Communicates with console from 775+ feet.
- Alarms to indicate sensor malfunction.

Application

For use in dry monitoring wells.

Model	Description
TSP-DVS	Discriminating vapor Brite™ sensor
TSP-KW4	Vapor sensor monitoring well pipe cap kit for 4" riser pipes

Note: This sensor communicates with the console using 3 wires.

MONITORING WELL SENSOR

INCON™ brand TS-MWS monitoring well sensors are discriminating liquid sensors which detect the presence of hydrocarbon floating on groundwater. Using a float switch and innovative conductive polymer strip, these sensors identify hydrocarbons anywhere along the length of the sensor.

Highlights

- Unique alarms for the detection of hydrocarbons or decreased groundwater levels.
- Completely reusable even after several exposures to hydrocarbons.
- Available in four different lengths to accommodate well depth.
- A microcomputer within sensor detects the presence of hydrocarbons and alerts a fuel management system of alarm conditions via digitally-encoded information.

Ordering Information

Model	Description
TSP-MWS-10	10' monitoring well sensor
TSP-MWS-15	15' monitoring well sensor
TSP-MWS-20	20' monitoring well sensor
TSP-MWS-25	25' monitoring well sensor

Note: This sensor communicates with the console using 3 wires.

Specifications

Application

- For use in wet monitoring wells.

Installation

- Normally installed in 4" groundwater monitoring wells.
- Integral well cap may be locked with standard padlock to prevent unauthorized access.

TSP-HLS LEVEL SENSOR

The TSP-HLS level sensor is an overfill prevention switch which is compatible with all Tank Sentinel® and fuel management system consoles. This sensor is also compatible with S940 Sensor Alarm Console. It may be adjusted to operate over a wide range of levels. The TSP-HLS is based on float-switch technology and is made of chemical-resistant materials to assure compatibility with most liquids. Each sensor is supplied with jacketed cable five feet in length. The TSP-HLS's normally closed output circuit provides supervised operation, ensuring that broken wires and similar failures will not go undetected.

The TSP-HLS is installed in a 2" NPT fitting on the tank. The level at which it operates may be adjusted by loosening a fitting and moving the sensor's shaft in or out of the tank as required.

Application

Overfill protection switch.

Theory of Operation

The secret to the TSP-HLS's reliability is its float switch technology. A small magnetically-activated reed switch is located inside the body of the sensor. Tiny magnets are positioned inside a lightweight float which is free to move up and down along the shaft so that the magnets are below the reed switch. When the sensor is immersed in liquid, the float rises and the magnet activates the reed switch, signaling the console that the high limit has been reached.

Model	Description
TSP-HLS-15	High product level sensor, 15" long, installed in tank
TSP-HLS-15/SS	High product level sensor, stainless steel 15" long, installed in tanks containing alternative fuels
TSP-HLS-30	High product level sensor, 30" long, installed in tank
TSP-HLS-30/SS	High product level sensor, stainless steel 30" long, installed in tanks containing alternative fuels

Note: This sensor communicates with the console using 2 wires.

DC400 DISPENSING CUTOFF SYSTEM

The DC400 Dispensing Cutoff System is a stand-alone, solid state two-part system which includes a controller and sensor, designed to automatically shut down product flow if liquid is detected inside containment spaces. Ideal for retrofit applications, the DC400 allows for easy compliance with new and evolving regulations, without the added expenses of shutting down your site to break concrete for new conduit and wiring installation. The DC400 can be mounted inside any turbine sump to provide complete pump shut down or mounted directly into dispenser sumps, allowing only the affected dispenser to be shut down as liquid is detected.

Highlights

- Automatically stops fuel from dispensing in the event of liquid detection.
- Easily installed in either turbine or dispenser sumps.
- Ideal for retrofit applications as system connects to existing turbine or dispenser wiring, eliminating the need to pull new wires or break concrete.

Application

Containment sump liquid detection resulting in dispensing cutoff.

Installation

- Simply mount the 404-4 Controller inside any containment sump and connect it to the existing turbine or dispenser wiring. (Dispenser installations require an electrical junction box with an open conduit hub).
- Connect the liquid sensor using the supplied watertight splice kit. Suspend it so it is just touching the bottom of the containment sump.

Specifications

- 404-4 Controller is compatible with:
- S404 Liquid Sensor

Note: Previous versions of the 404-4, S406, and S404 are not compatible. Both the controller and sensor must be replaced if either requires it. Core credit available for legacy items.

Dimensions:

- 04-4 Controller: 6.6" x 6.2" x 3.2"
- 404-4 Input power: 90-250 VAC, 50/60 Hz, 0.25 A
- 404-4 Relay contacts: 12A, 2 hp @ 250 VAC, 12A, 1.5 hp @ 120 VAC
- Operating temperature: -4° to 140 °F (-20° to +60 °C)
- Enclosures: All sensors intrinsically safe, controller explosion-proof
- Detection time: <1 second
- S404 sensor minimum detectable water limit: 0.98" (25 mm)

Capabilities

- Cutoff power to submersible pumps or dispensers when liquid is detected in containment sumps.
- Automatic reset on liquid removal.

Approvals

- UL, cUL
- Third party certification of leak detection capabilities

Model	Description
DC404	S404 liquid sensor and controller
DC404C	S404 liquid sensor and controller for Canadian applications
TS-FE	FE Petro STP electric junction box adapter
TS-RJ	Red Jacket™ STP electric junction box adapter
TS-RJQ	Red Jacket™ Quantum™ STP electric junction box adapter

Note: Electric junction box adapters for STP installations.

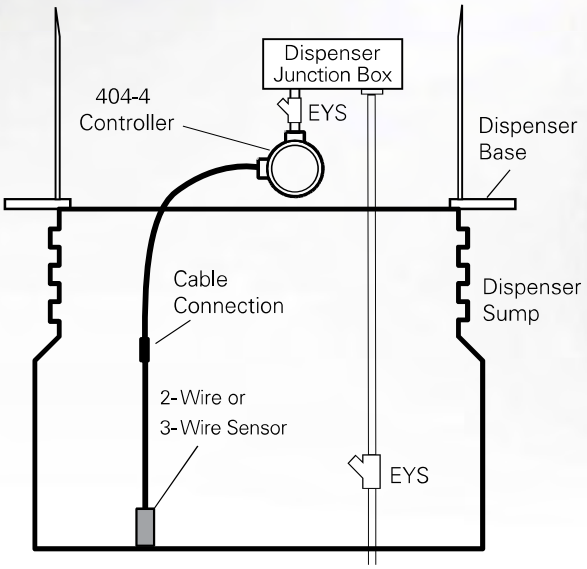

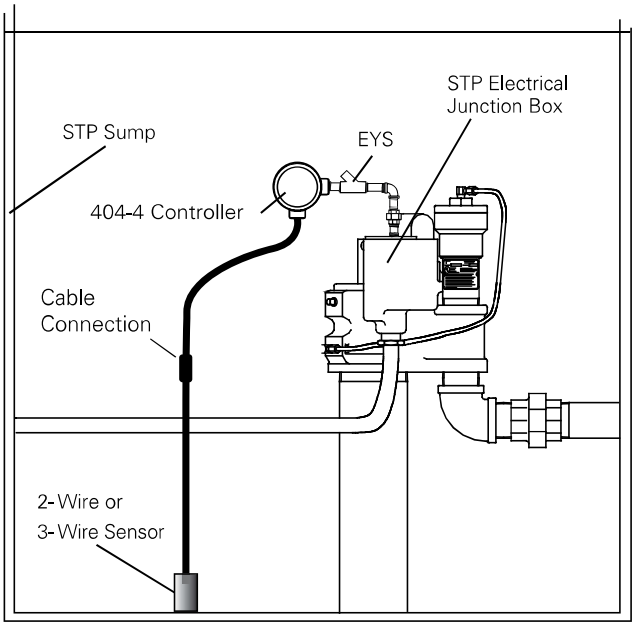

Quantum™ is a trademark of Gilbarco Inc.
Red Jacket™ is a trademark of Veeder-Root Company.

TSP-K12 INTERSTITIAL SENSOR RISER CAP INSTALLATION KIT

Installation kit for installing the TSP-DIS, TSP-EIS or TSP-ULS in dry interstitial spaces with 2" riser pipe openings.

Highlights

- Supplied with a cord grip and butt splices for wiring connections.
- Easily installs into a two-inch riser pipe with a compression fit against the walls of the pipe.
- Provided with security holes that fit a padlock to prevent unauthorized access into the riser pipe.

Model	Description
TSP-K12	Interstitial sensor riser cap kit for 2" riser pipes

TSP-KV4 HYDROSTATIC SENSOR VENTED RISER CAP INSTALLATION KIT

Replacement vented installation kit for use with the TSP-HIS or TSP-HIS XL sensor installed in a 4" reservoir opening on double wall fiberglass tanks. One TSP-KV4 is already included with each TSP-HIS or TSP-HIS-XL.

Highlights

- The riser cap is compression fit into a 4" riser pipe via the use of a lever.
- Supplied with a cord grip and butt splices for wiring connections.
- Provided with security holes that fit a padlock to prevent unauthorized access into the riser pipe.

Model	Description
TSP-KV4	Hydrostatic sensor vented riser cap kit for 4" riser pipes

TSP-KW4 INTERSTITIAL/ MONITORING WELL PIPE CAP INSTALLATION KIT

Installation kit for installing sensors in a dry tank interstitial or monitoring well with a 4" riser.

Highlights

- The interstitial/monitoring well cap is compression-fit into the riser pipe via the use of a lever.
- Supplied with a cord grip and butt splices for wiring connections.
- Provided with security holes that fit a padlock to prevent unauthorized access into the riser pipe.

Model	Description
TSP-KW4	Interstitial/monitoring well pipe cap kit for 4" riser pipes

SENSOR INSTALLATION ACCESSORIES

UNI-STRUT® MOUNTING KIT

Installation kit for installing the TSP-DDS and TSP-DTS in sump space.

Highlights

- Easily customized to fit virtually any sump by cutting the Unistrut™ assembly to desired length.
- Provided with 2", 3" and 4" pipe clamps for mounting to sump piping.
- Sensor location easily adjusted by the unique sliding feature of the Unistrut™ assembly.

Model	Description
TSP-KS	Unistrut™ mounting kit for TSP-DDS and TSP-DTS sensors

Sensor Installation Accessories

Part Number	Description
TSP-DB1	One direct burial splice connector kit
TSP-DB10	Pack of 10 direct burial splice connector kits
TSP-DBTOOL	Epoxy dispensing tool
TSP-KW30	Pack of 30 3M™ splice connectors

Notes:
1. Use the TSP-DB1 or TSP-DB10 for direct burial cable applications or when weatherproof junction boxes are not used.
2. The DBTOOL is required to dispense the epoxy.
3. Each direct burial splice connector kit includes a receptacle, three splice connectors and epoxy for the dispensing tool.

3M™ is a trademark of 3M Company.
Unistrut™ is a trademark of Unistrut Corporation.

TS-RA1 REMOTE AUDIBLE AND VISIBLE ALARM UNIT

The TS-RA1 is a remote audible and visible alarm unit for use with Franklin Fueling Systems Automatic Tank Gauges. The unit may be used as an overfill alarm as required by federal, state, and local regulations, or as a general purpose remote alarm annunciator.

Model	Description
TS-RA1	Standard intensity, tank overfill alarm with light and horn
TS-RK	Remote tank overfill alarm acknowledge unit

Highlights

- Pulsating light and piezoelectric buzzer warn of alarm conditions.
- Can be combined with TS-RK remote acknowledge unit to provide choice of alarm silencing options.
- Can be programmed through Franklin Fueling Systems Automatic Tank Gauges to activate in response to any type of alarm in the system.
- Alarms for overfill and general purpose.

Installation

- Install within 1000 feet of console.
- Wiring: Type THHN, TFFN or THWN, 18 AWG or larger installed in conduits and completely separated from probe and sensor circuits.
- Operates directly from 110 VAC line power.
- For use in indoor/outdoor applications that have low background noise.

TS-RA2 REMOTE AUDIBLE AND VISIBLE ALARM UNIT

The TS-RA2 is a high intensity remote audible and visible alarm unit for use with Franklin Fueling Systems Automatic Tank Gauges. The unit may be used as an overfill alarm as required by federal, state, and local regulations, or as a general purpose remote alarm annunciator.

Model	Description
TS-RA2	High intensity, tank overfill alarm with light and horn
TS-RK	Remote tank overfill alarm acknowledge unit

Highlights

- Pulsating light and electromechanical buzzer warn of alarm conditions.
- Ideal for outdoor applications where a high intensity alarm is necessary.
- Can be combined with TS-RK remote acknowledge schemes.
- Has adjustable sound level with useful range of over 200 feet.

Installation

- Install within 1000 feet of console.
- Wiring: Type THHN, TFFN or THWN, 18 AWG or larger installed in conduits and completely separated from probe and sensor circuits.
- Operates directly from 110 VAC line power.
- For use in indoor/outdoor applications that have high background noise.

TS-RK REMOTE ALARM ACKNOWLEDGE UNIT

The TS-RK is a remote alarm acknowledge unit for use with all Franklin Fueling Systems Automatic Tank Gauges equipped with remote alarm annunciators.

Highlights

- Locks or silences audible and visible alarms up to 1000 feet.
- Facilitates rapid response during emergencies in either indoor or outdoor locations.
- Can be combined with TS-RA1 or TS-RA2 remote alarm units to provide a choice of alarm silencing options.
- Housed in rugged, nonmetallic NEMA® 4X unit ideal for any weather condition.

Model	Description
TS-RK	Remote tank overfill alarm acknowledge unit

Installation

- Install within 1000 feet of console.
- Wiring: Type THHN, TFFN or THWN, 18 AWG or larger installed in conduits and completely separated from probe and sensor circuits.
- In conjunction with TS-RA1 or TS-RA2 and operates directly from 110 VAC line power.

NEMA® is a registered trademark of National Electrical Manufacturers Association.

TS-DIM DISPENSER INTERFACE MODULE

INCON's Tank Sentinel® console and TS-DIM together offer the ultimate solution for automating the inventory reconciliation process. Available as an internal module on fuel management system consoles, not available on the TS-750 or Colibri.

Specifications

- Power: 110 VAC 20 Watts.
- Size: 8-1/2" × 7-1/2" × 2".
- Environment: 35 °F to 120 °F, 10-90 non-condensing humidity.
- Electrical: 115 VAC 60 Hz, 20 Watts, dedicated circuit with earth ground.

Applications

INCON's dispenser interface module (TS-DIM) connects to the manufacturer's dispenser distribution box to collect dispensing data. The Tank Sentinel® console gathers all relevant dispensing information.

- Collects information from the dispenser via the distribution box.
- Eliminates the need to manually read dispenser meters and stick tanks to reconcile inventory.
- Provides everything required to automate the reconciliation process.
- Directly connects to the Tank Sentinel® console via a 3-wire RS 485 protocol interface to all major dispenser manufacturers including Tokheim™, Gilbarco™, Dresser Wayne™ and Schlumberger.
- Available on fuel management system consoles where disperser configuration requires a second DIM.

Highlights

- Easy to use and install.
- Compatible with most manufacturer's dispensers.
- Gathers all relevant dispensing information.
- Allows remote reconciliation.

Capabilities

The TS-DIM collects information on all dispensed product and consolidates the data to a concise, easy-to-read format, facilitating the inventory reconciliation process.

- Allows the ATG console to gather all relevant dispensing information.
- Calculates the quantity of product dispensed from each fueling point.
- Monitors up to 64 fueling points.
- Tracks the exact amount of product dispensed even during fuel deliveries.
- Reliable operation and complete data gathering ensures accurate dispenser readings.

Wayne™ is a trademark of Dresser Equipment Group Inc.
Gasboy™, Gilbarco™, Encore™, and G-Site™ are trademarks of Gilbarco Inc.
Tokheim™ is a trademark of Tokheim Holding B.V.

Model	Description
TS-DIM/G	Dispenser interface module/Gilbarco™ dispensers
TS-DIM/GS	Dispenser interface module/G-site™ controller
TS-DIM/M	Dispenser interface module/Mechanical dispensers
TS-DIM/T	Dispenser interface module/Tokheim™ dispensers
TS-DIM/W	Dispenser interface module/Wayne™ dispensers

Note: Not available with the TS-750 or Colibri consoles.

TS-DIM Installation

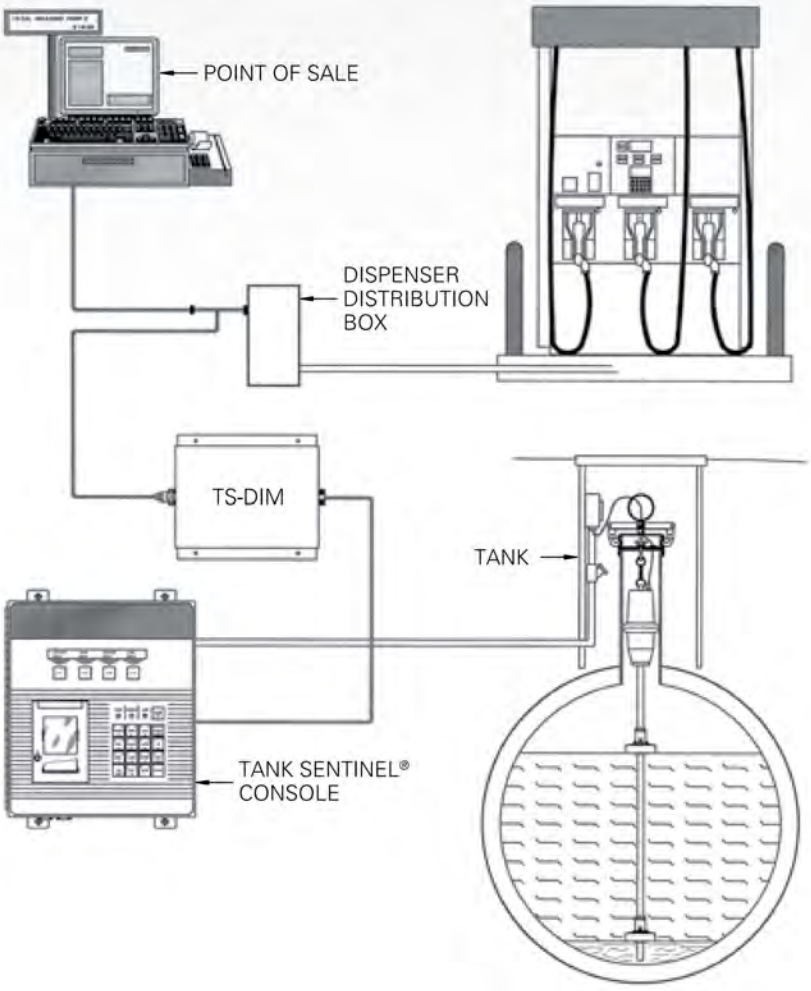

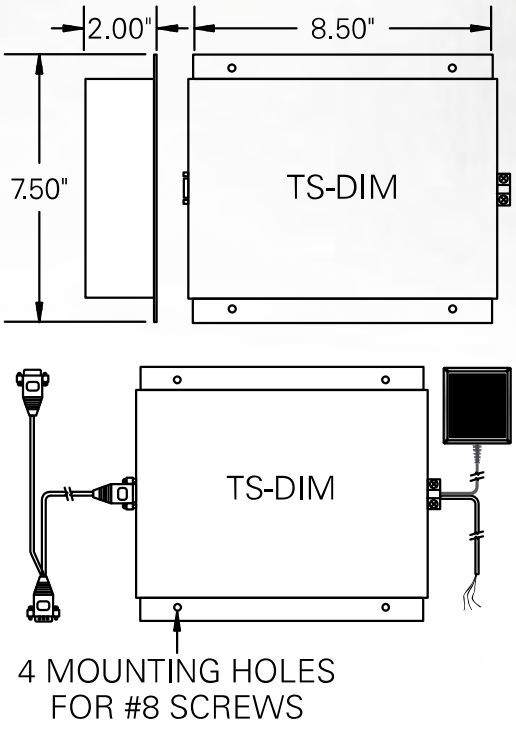

Wayne™ is a trademark of Dresser Equipment Group Inc.
Gasboy™, Gilbarco™, Encore™, and G-Site™ are trademarks of Gilbarco Inc.
Tokheim™ is a trademark of Tokheim Holding B.V.

TS-TPI TURBINE PUMP INTERFACE

The TS-TPI turbine pump interface provides a communication link for FE Petro intelligent pump controllers to communicate faults to enabled devices. This link allows the INCON ATG to include the reporting of submersible pump conditions to a monitoring party or to the station operator. Also, by integrating the intelligence of these two systems, the ATG can keep the station pumping fuel without service calls during several events that normally would result in down time and lost fuel sales. The TS-TPI is a standard internal option on the fuel management system consoles, not available on the TS-750 or Colibri.

Highlights

- In dual storage tank installations where two submersibles are used for one product grade with a single line, the ATG will always start the pump in the tank with the highest product level.
- INCON ATG can be programmed to respond to faults in the submersible pumping system.
- Automatic reset of the dry running fault in the submersible pump controller.
- Disables the submersible pump in the event of high water levels.
- Remote monitoring of the entire fueling system.
- Communication of pump diagnostic faults to remote monitoring party.
- Standalone TS-TPI can be mounted in a location convenient to on-site personnel.
- In one product grade dual tank installations with two submersible pumps discharging into a single discharge line, the second pump starts directly upon the shutdown of the first upon any shutdown fault. Within moments, the fault is reported to the monitoring party.

Model	Description
TS-TPI	Turbine pump interface

NOTE: NOT AVAILABLE WITH THE TS-750.

System Requirements

TS-TPI integrated into TS-LS300 AutoLearn™ line leak detection console.

- INCON TS-1001 or TS-2001 ATG console with version 3.5 software or higher.
- INCON TS-LS300 line leak detection console.
- FE Petro smart controller model STP-SCI, STP-SCIII or MagVFC™.
- For remote communication capabilities, System Sentinel™ version 3.1 software or higher or System Sentinel AnyWare™ version 1.0 or higher.
- For TS-TPI standalone option,
- INCON TS-1001 or TS-2001 ATG console with version 3.5 software or higher.
- TS-TPI module.
- FE Petro smart controller model STP-SCI, STP-SCIII or MagVFC™.
- For remote communication capabilities, System Sentinel™ version 3.1 software or higher, or System Sentinel AnyWare™ version 1.0 or higher.

Configurations

- Standalone: TS-TPI turbine pump interface module.
- Included in AutoLearn™ TS-LS300: TS-TPI turbine pump interface module included in all TS-LS300 AutoLearn™ line leak detectors.

TS-ROM2 BRITEBOX™ RELAY OUTPUT MODULE

The TS-ROM2 relay output module is a BriteBox™ expansion control module which may be used with the Tank Sentinel® console to perform control functions in response to alarm conditions. Not available on TS-750, fuel management system, or Colibri consoles.

Model	Description
TS-ROM2/4	Relay output module, 4 channel SPST
TS-ROM2/8	Relay output module, 8 channel SPST
TS-KB	Installation kit

Notes:
1. Up to four BriteBoxes™ can be connected to the console (two TS-SEMs, one TS-ROM2 and one TS-CIM can be connected).
2. One TS-ROM2 is typically used for positive pump shut down when certain alarms occur.
3. Order one TS-KB install kit for each BriteBox™ (includes ribbon cable, flexible conduit and fittings).
4. Not available on TS-750, fuel management system, or Colibri consoles.

Highlights

- Designed for use with the Tank Sentinel® console to perform key emergency functions, disable pumps, operate indicator lights, sound alarms, and perform other control functions.
- Flexible configuration that energizes or de-energizes each channel's relay in response to an alarm or loss of power.
- Available in 4 and 8 channel configurations.
- Uses miniature electromechanical relays to switch external loads.
- Each TS-ROM2 output channel can switch a 3 Amp 120/240 VAC load.

Installation

- Originally installed with Tank Sentinel® consoles, or can be added later.
- BriteBox™ mounted no further than 18" from Tank Sentinel® console.
- Wiring: ten conductor BriteBus™ ribbon cable run through ¾" flexible or rigid conduit connecting Tank Sentinel® console to BriteBox™ enclosure. TS-KB installation kit recommended.
- Wiring from the load circuits is connected to the field wiring terminal strip in the TS-ROM2.

TS-EPS ETHERNET PORT SERVER

The TS-EPS is a serial to ethernet converter that allows Tank Sentinel® consoles to be assigned an IP address.

Model	Description
TS-EPS	Ethernet port enabling device for Tank Sentinel® consoles
TS-EPS-N	Ethernet port enabling device with null modem cable for other ATG systems. Not required with fuel management system or Colibri consoles.

Note: The ethernet port device allows remote access to tank gauge console through an ethernet IP address.

EXTERNAL CONSOLE HARDWARE ACCESSORY

Waterproof Enclosure

(not available on fuel management system consoles)

Part Number	Description
TS-NEMA4X	NEMA® 4 waterproof enclosure

NEMA® is a registered trademark of National Electrical Manufacturers Association.

SYSTEM SENTINEL™ REMOTE FUEL MANAGEMENT SOFTWARE

System Sentinel™ is a powerful, versatile, and easy-to-use remote fuel management software that can communicate with all major tank gauge brands.

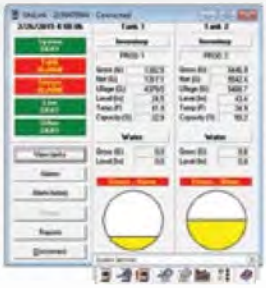

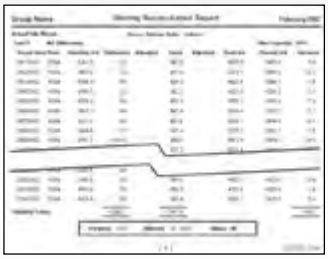

Highlights

- Broad communication capabilities via modem, local or wide area networks, satellites, DSL, cable or other high-speed internet-based methods.
- Gathers specified data in a user-defined polling schedule or in real-time.
- Provides summarized or detailed information about all fueling sites.
- Deliveries are forecast from current inventory usage rates.
- Collects dispensing data to allow real-time reconciliation of sales data.
- Provides centralized control of all compliance information such as tank and line leak testing data and leak detection sensor status.
- A wide variety of reports can be custom-scheduled, displayed and printed or faxed at specific times.
- Displays data, highlights trouble spots and facilitates management by exception.
- Supports an unlimited number of sites.
- Offers immediate notification of alarms for corrective action.

Specifications

- Microsoft Windows®: 2000 or XP Professional editions, or Windows NT 2.0 or Windows 98.
- Pentium® class processor: 33 MHz minimum.
- Minimum of 50 MB available hard drive space.
- Minimum of 32 MB RAM, 64 MB RAM with Windows XP.
- Display setting of 800 × 600 pixels with small font setting.
- Modem, ethernet or serial connection.

Applications

With its easy-to-use report interface, System Sentinel™ allows you to spend more time managing your business. System Sentinel™ generates a wide variety of reports that can be customized to meet your business needs. The report formats are easy to read and allow you to extract relevant data quickly and easily for intelligent decision making. Some available reports are:

- Alarm history.
- Delivery.
- Leak test detail.
- Tank test detail.
- Detail and summary inventory.
- Monthly, daily, and shift reconciliation.
- Alarm status.
- Average daily usage.
- Cathodic protection.
- Regulatory with sensor status.

Capabilities

- Allows remote access to all fueling sites 24 hours a day.
- Inventory can be monitored as needed to precisely schedule deliveries.
- Monthly reconciliation and reconciliation summary reports allow for adjustments in delivery or sales volume data.
- Can monitor and report effectiveness of cathodic anti-corrosion devices.
- Communicates with all major tank gauge brands, no need to replace existing tank guages.

Pentium® is a registered trademark of Intel Corporation.
Microsoft Windows® is a registered trademark of Microsoft Corporation.

SYSTEM SENTINEL™ INTERACTIVE TOOL BAR

System Sentinel™'s interactive tool bar lets you access your site data with a click of the mouse. Each of the icons represents an important module of System Sentinel™.

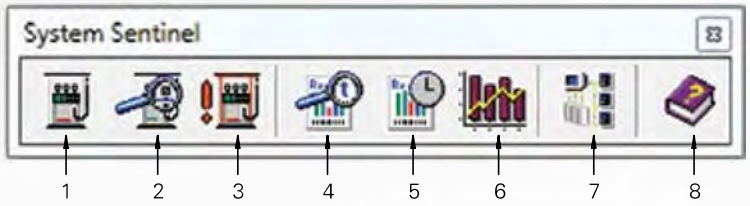

Number	Module	Description
1	Site Sentinel	Allows you to set-up and store the programming of tank gauges at your sites
2	Site Watch	Enables and assigns the polling function
3	Site Alert	Monitors your sites and notifies you when any alarms occur
4	Report Sentinel	Queries the database and organizes the information into user-selected reports or data format
5	Report Scheduler	Allows you to schedule reports to be displayed, printed or faxed at predefined times
6	Site Director	Provides a single-screen view of the alarm status up to 25 sites simultaneously, as well as product usage, delivery forecasts, and regulatory compliance status for management by exception
7	Database Administrator	Allows you to archive and/or purge the data in your database
8	Help	Provides online assistance when using the software

SYSTEM SENTINEL™ TECH EDITION

A cost effective version of System Sentinel that includes all the programming and diagnostic interface features used by technicians. (Site Sentinel, Report Sentinel, Database Administrator)

SYSTEM SENTINEL ANYWARE™ INTERNET ENABLED FUEL MANAGEMENT SOFTWARE

System Sentinel *AnyWare*™ is an internet based fuel management package designed to provide you with unparalleled monitoring and control capabilities. Residing on a local server in your home office, System Sentinel *AnyWare*™ will allow your personnel to access site information through any web browser.

Highlights

- Broad communication capabilities via modem, local or wide area networks, satellites, DSL, cable or other high-speed internet-based methods.
- Gathers specified data in a user-defined polling schedule or in real-time.
- Inventory can be monitored as needed to precisely schedule deliveries.
- Deliveries are forecast from current inventory usage rates.
- Provides centralized control of all compliance information such as tank and line leak testing data and leak detection sensor status.
- Access to information can be controlled for multiple users.
- A wide variety of reports can be custom-scheduled, displayed, and printed or faxed at specific times.
- Communicates with all major tank gauge brands.
- Supports an unlimited number of sites.
- Offers immediate notification of alarms for corrective action.

Specifications

- Server:
  Microsoft Windows® server operating system.
  933 MHz Pentium® III with 512 MB of physical memory. 100 MB for the application and 500 MB to 1 GB for the database disk space. Second processor will boost performance significantly.
- Third Party application:
  Microsoft® Internet Server (IIS) web server.
  Microsoft® SQL server.
  Seagate® Crystal Reports server.

Capabilities

- The powerful rules engine of the System Sentinel AnyWare™ allows you to manage by exception by automatically forwarding alarm, leak test, and inventory information to the appropriate people when immediate attention is required.
- Capable of communicating to an unlimited number of sites using your WAN (wide area network) or a bank of multiple modems. System Sentinel AnyWare™ will quickly collect your site information and get it to you to help you run your business.

Pentium® is a registered trademark of Intel Corporation.
Microsoft Windows® is a registered trademark of Microsoft Corporation.
Microsoft® is a registered trademark of Microsoft Corporation.
Seagate® is a registered trademark of Seagate Technology LLC.

GET CONNECTED ANYWARE™ REMOTE POLLING SERVICE

Get Connected *AnyWare*™ is a remote polling service from Franklin Fueling Systems that allows customers internet access to their sites from any web browser. Get Connected *AnyWare*™ acts as an application service provider of our powerful System Sentinel *AnyWare*™ software, allowing customers access to the application running on our servers at the Get Connected Data Center. Through high speed ethernet or modem dial-up communications, Get Connected *AnyWare*™ can communicate with ATGs and retrieve important fuel management, alarm and compliance data.

Site can be accessed at *www.gcanyware.com*. Log in using the user demo and password demo.

Highlights

- E-mails or text messages are immediately sent upon receipt of an alarm notification from the console to help lower service costs, provide less downtime and help have a higher throughput.
- Automatically and reliably retrieves fuel management and compliance data from all sites to eliminate reporting errors, lost printouts and keep all data in one place. This frees up site personnel for other tasks.
- Hardware and software is maintained by FFS so there is no need to purchase, install or maintain a server to monitor your sites.
- Secure access to site data from anywhere so you can view data with immediate accuracy from your home, office or the road.
- Daily usage and delivery forecast tools help to accurately schedule fuel drops and eliminate running out.
- A wide variety of reports and date range options help generate various compliance, alarm and inventory reports.
- Centralized, secure compliance information makes all your sites accessible in minutes.

Polling Options	
One poll	AM, All history poll
Two polls	PM, Alarms, inventory, and latest delivery
Three polls	Late PM, Alarms, inventory, and latest delivery
On-demand	Customer directed polling any time

GET CONNECTED ANYWARE™ REMOTE POLLING SERVICE

Monthly fee schedule per site based on ATG and connection type. Data export and Data Archive services also available.

Polling Service Details

Get Connected *AnyWare*™ hosts the server, the application (System Sentinel *AnyWare*™) and provides internet access to it. Online training and phone/e-mail support are available. Other details include:

- Ability to browse to the Get Connected AnyWare™ Web site from home, office, on the road or anywhere you have internet access.
- Customers can monitor their own sites and respond to alarms, compliance issues, and perform fuel management.
- Rules can be created to send out e-mails and text messages on alarms and other events.
- All sites will be polled at least once daily and more frequent polling options are available.
- Get Connected AnyWare™ consists of an auto-renewing six month agreement that can be discontinued at any time with a 30-day notice.

RECEIVING FOR HIGH SPEED CONNECTIONS

Customers with an ethernet connection can program their ATGs to contact Get Connected *AnyWare*™ on various alarms or events. Get Connected *AnyWare*™ will receive these transmissions and poll the site for new data. The new data will be applied to the current rules and e-mails will be generated if applicable.

SUPPORT WHILE GETTING CONNECTED

Franklin Fueling Systems will provide support in bringing online and troubleshooting communication with sites using Franklin Fueling Systems communications equipment. This includes the TS-EPS Ethernet port server, the TS-MLS multi-line phone switch and the TS-FM2 internal modem.

SITE SURVEY

If requested, Franklin Fueling Systems will recommend a distributor or service company in the customer's area to perform site surveys of the sites they wish to bring online.

MORE FUNCTIONS

Get Connected *AnyWare*™ will support connectivity to the following ATGs:

- INCON T5 Series (TS-5, TS-550, TS-5000, TS-550 evo, TS-5000 evo, TS-EMS).
- INCON TS-1001 Series (TS-1001, TS-2001, TS-504, TS-508, TS-750).
- EBW Autostik (Bulkstik and Autostik Jr. version 3.905 or greater).
- Veeder-Root™ TLS-300, 350 and Gilbarco™ EMC Automatic Tank Gauges.

Connection can be established via ethernet or internal modem. The Get Connected *AnyWare*™ data center will store two years worth of data for each site and allow you to export your data. Data older than two years can be accessed with the data archive service.

SUMP TEST SYSTEM KIT

The TS-STS sump test system is designed specifically to test dispenser and turbine containment sumps for leaks. Up to four sumps can be leak-tested simultaneously with accurate compliance test results available in just 15 minutes. The system consists of two carrying cases containing a TS-STS console and quick start guide in one, and leak test probes, cables, and printer paper in the other.

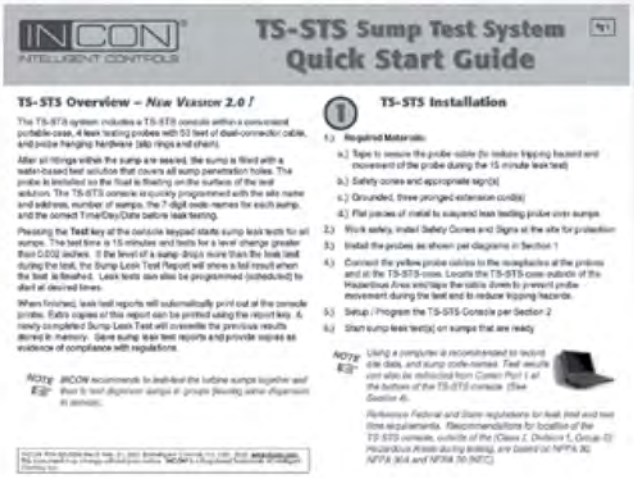
INCON
INTELLIGENT CONTROLS

TS-STS Sump Test System
Quick Start Guide

TS-STS Overview – NEW VERSION 2.0 !

TS-STS Installation

Highlights

- Designed to deliver cost-effective environmental compliance test data.
- Easily transported in two supplied carrying cases.
- Easily set-up and programmed with site-specific data and sump identification before a test. Site and test data can also be saved to a laptop database.
- Laptop interface optional using System Sentinel™ Tech Software.
- Accommodates up to four probes for testing of up to four dispensers or four turbine containment sumps simultaneously.
- Uses INCON's magnetostrictive probe technology for unparalleled accuracy and reliable results.
- Highly accurate leak test detects level changes greater than 0.002 inches during the fifteen minute test.
- Provides accurate test solution levels for each sump monitored.
- Automatically prints out passed and/or failed sump leak test reports in just fifteen minutes after starting a leak test. Printer included.
- Shows the date and time of the test, test-solution levels and the leak test results on sump leak test reports.
- Additional sump leak test reports can also be printed at the console before other tests are completed.

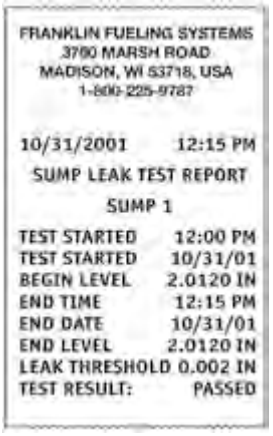
FRANKLIN FUELING SYSTEMS
3760 MARSH ROAD
MADISON, WI 53718, USA
1-800-225-9787

10/31/2001 12:15 PM

SUMP LEAK TEST REPORT

SUMP 1

TEST STARTED	12:00 PM
TEST STARTED	10/31/01
BEGIN LEVEL	2.0120 IN
END TIME	12:15 PM
END DATE	10/31/01
END LEVEL	2.0120 IN
LEAK THRESHOLD	0.002 IN
TEST RESULT:	PASSED

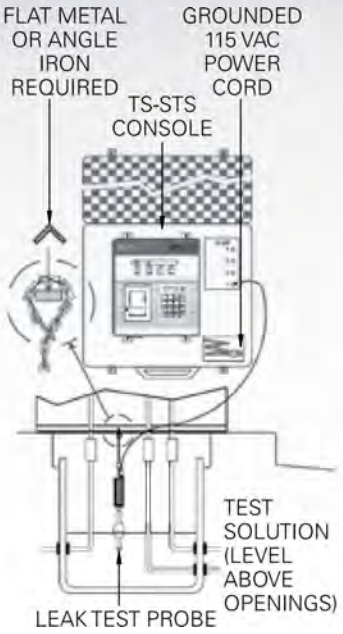

Specifications

- Operating temperature:
  Console - 32° to 122 °F (0° to 50 °C).
  Leak test probes - -40° to 140 °F (-40° to 60 °C).
- Storage temperature:
  Console - -4° to 140 °F (-20° to 60 °C).
  Leak test probes - -40° to 158 °F (-40° to 70 °C).
- Intrinsic safety rating:
  Leak test probes - Class 1, Div. 1, Group D.
- Carry case weight and dimensions:
  Console - 33 lbs. (15 kg), 24" × 19" × 8½" (62 cm × 49 cm × 22 cm).
  Leak test probes - 30 lbs. (13.5 kg), 38" × 18" × 6"
  (97 cm × 45 cm × 16 cm).
- Number of sumps monitored:
  Console - 4.
  Leak test probes - 1.
- Applicable liquids:
  Leak test probes - testing solution.
- Level units:
  Console - inches.
- Display type and size:
  Console - alphanumeric LCD, 2 lines of 40 characters.
- Printer type:
  Console - 24 column thermal printer.
- Power requirements:
  Console - 115 VAC, 50 Watts, 6' power cord with 3 prong plug supplied.
  Leak test probes - 50' cable supplied.

Model	Description
TS-STS-2K	Sump test system with two probes
TS-STS-3K	Sump test system with three probes
TS-STS-4K	Sump test system with four probes

T5 Series and TS-EMS Consoles

Part Number	Description
Common To All (TS-5 uses TSSP-PRB only)	
TSSP-10ARLY	Spare 6 output 10 amp relay module
TSSP-2WSNS	Spare 12 input 2-wire sensor module
TSSP-3WSNS	Spare 8 input 3-wire sensor module
TSSP-420IB	Spare 8 input 4-20ma module
TSSP-420EXP	Spare 8 input EXP 4-20ma module
TSSP-ACI	Spare 12 input AC input module
TSSP-IO	Spare input output module
TSSP-PRB	Spare 12 input probe module
TSSP-RLY	Spare 8 output relay module
TSSP-PS	Power supply module
TSSP-IPPTR	Replacement Impact printer for TS-550, TS-5000 (pre 8/2010) and TS-EMS (upgrade to thermal optional)
TSSP-TMPTR	Thermal printer assembly for TS-550, TS-5000, TS-EMS
TSSP-TRMBLK	Package of 10 assorted terminal blocks
TSSP-EXPPS	Expansion console power supply
TS-5/550/5000/ Only	
TSSP-CM	Spare controller module, fuel management system application only, no software options
TSSP-CM/R	Replacement controller module, factory programmed with required options
TSA-CMUPG	Upgrade kit for TSSP-CM in stock to add original options
TSSP-LCDIFB5x	LCD display and interface board kit for TS-550, TS-5000
TSSP-T550MB	TS-550 motherboard (for use with TS-EMS also)
TSSP-T5000MB	TS-5000 motherboard
TSSP-SP5FUSE	Spare Fuse Kit
TS-5 Only	
TSSP-T5MB	TS-5 motherboard
TSSP-LCDIFB5	LCD display and interface board kit for TS-5
TS-EMS Only	
TSSP-CM/EMS	Spare controller module for TS-EMS, vapor recovery monitoring application only
TSSP-CM/EMSB	Spare controller module for TS-EMS (balance site), VRM (1.1) application only
TS-550/5000 evo Only	
EVO-CM	Spare TS-550/5000 evo controller module, standard features only, no software options
EVO-CM/R	Replacement TS-550/5000 evo controller module, factory programmed with required options
EVO-CMUPG	Upgrade kit for EVO-CM in stock to add original options
EVO-LCD	Replacement color LCD display
EVO-IFB	Replacement display/printer interface board
EVO-TMPTR	Thermal printer assembly for TS-550/5000 evo

Note: The serial number of the old CM must be provided when ordering the TSSP or EVO-CM/R. Provide the serial number of the old and new CM when ordering the TSA or EVO-CMUPG.

Part Number	Description
CL-MBWD	Replacement main board/display
CL-MBWD/R	Replacement main board/display, factory programmed with required options
CL-MB	Replacement main board (no display systems)
CL-MB/R	Replacement main board (no display systems), factory programmed with required options
CL-CVRWD	Replacement cover with display opening
CL-CVR	Replacement cover without display opening
CL-MBUPG	Upgrade kit for CL-MBWD in stock to add original options

Note: The serial number of the old main board must be provided when ordering the CL-MBWD/R. Provide the serial number of the old and new main boards when ordering the CL-MBUPG

TS-504 and TS-750 Consoles

Part Number	Description
TSSP-BAT	3 Volt lithium battery
TSSP-DSP1	Keypad/display PC board
TSSP-DSPKC1	Display/keypad cable
TSSP-ENCLK	Enclosure lock and key
TSSP-PSTB4-SM	Surface mount probe/sensor terminal board, serial numbers 100000 and higher
TSSP-PTR	Printer assembly
TSSP-PTRC1	Printer cable
TSSP-SMSB4	Surface mount system PC board, 110 VAC, serial numbers 100000 and higher
TSSP-SPFUSE	Spare fuse kit
TSSP-SVKT4-SM	TS-504 and TS-750 service kit for surface mount boards*
VSSP-SMSB4	Surface mount system PC board, 220 VAC, serial numbers 100000 and higher

*TSSP-SVKT4-SM includes one of the following: TSSP-SMSB4, TSSP-DSP1, TSSP-PSTB4-SM, TSSP-PTR, TSSP-PTRC1, TSSP-DSPKC1, TSSP-SPFUSE, TSSP-ENCLK and TSSP-BAT.

Note: TSSP-MSB4 boards are no longer available. Order TSSP-SMSB4 main board and TSSP-PSTB4-SM terminal board as replacement.

TS-508 Console

Part Number	Description
TSSP-BAT	3 Volt lithium battery
TSSP-DSP1	Keypad/display PC board
TSSP-DSPKC1	Display/keypad cable
TSSP-ENCLK	Enclosure lock and key
TSSP-PSTB8-SM	Surface mount probe/sensor terminal board, serial numbers 100000 and higher
TSSP-PTR	Printer assembly
TSSP-PTRC1	Printer cable
TSSP-SMSB8	Surface mount system PC board, 110 VAC, serial numbers 100000 and higher
TSSP-SPFUSE	Spare fuse kit
TSSP-SVKT8-SM	TS-508 service kit for surface mount boards*
VSSP-SMSB8	Surface mount system PC board, 220 VAC, serial numbers 100000 and higher

*TSSP-SVKT8-SM includes one of the following: TSSP-SMSB8, TSSP-DSP1, TSSP-PSTB8-SM, TSSP-PTR, TSSP-PTRC1, TSSP-DSPKC1, TSSP-SPFUSE, TSSP-ENCLK and TSSP-BAT.

Note: TSSP-MSB8 boards are no longer available. Order TSSP-SMSB8 main board and TSSP-PSTB8-SM terminal board as replacement.

TS-1001 Console

Part Number	Description
TSSP-BAT	3 Volt lithium battery
TSSP-DSP1	Keypad/display PC board
TSSP-DSPKC1	Display/keypad cable
TSSP-ENCLK	Enclosure lock and key
TSSP-PSTB1-SM	Surface mount probe/sensor terminal board, serial numbers 100000 and higher
TSSP-PTR	Printer assembly
TSSP-PTRC1	Printer cable
TSSP-SMSB4	Surface mount system PC board, 110 VAC, serial numbers 100000 and higher
TSSP-SPFUSE	Spare fuse kit
TSSP-SVKT1-SM	TS-1001 service kit for surface mount boards
TSSP-T1KEY	Replacement key
VSSP-SMSB4	Surface mount system PC board, 220 VAC, serial numbers 100000 and higher

*TSSP-SVKT1-SM includes one of the following: TSSP-SMSB4, TSSP-DSP1, TSSP-PSTB1-SM, TSSP-PTR, TSSP-PTRC1, TSSP-DSPKC1, TSSP-SPFUSE,TSSP-ENCLK and TSSP-BAT.

Note: TSSP-MSB4 boards are no longer available. Order TSSP-SMSB4 main board and TSSP-PSTB1-SM terminal board as replacement.

TS-2001 Console

Part Number	Description
TSSP-BAT	3 Volt lithium battery
TSSP-DSP2	Keypad/display PC board
TSSP-DSPKC2	Display/keypad cable
TSSP-ENCLK	Enclosure lock and key
TSSP-PSTB2-SM	Surface mount probe/sensor terminal board, serial numbers 100000 and higher
TSSP-PTR	Printer assembly
TSSP-PTRC2	Printer cable
TSSP-SMSB8	Surface mount system PC board, 110 VAC, serial numbers 100000 and higher
TSSP-SPFUSE	Spare fuse kit
TSSP-SVKT2-SM	TS-2001 service kit for surface mount boards*
VSSP-SMSB4	Surface mount system PC board, 220 VAC, serial numbers 100000 and higher

*TSSP-SVKT2-SM includes one of the following: TSSP-SMSB8, TSSP-DSP2, TSSP-PSTB2-SM, TSSP-PTR, TSSP-PTRC2, TSSP-DSPKC2, TSSP-SPFUSE, TSSP-ENCLK and TSSP-BAT.

Note: TSSP-MSB2 boards are no longer available. Order TSSP-SMSB8 main board and TSSP-PSTB2-SM terminal board as replacement.

DC400

Part Number	Description
404-4	Controller
404-4C	Controller for Canadian applications
S404	Float switch sensor

Note: Replacement parts not compatible with legacy DC400 systems. Both controller and sensor must be replaced. Order DC404 system to replace legacy components.